ORSCHELN® EUROPE

HP Cables

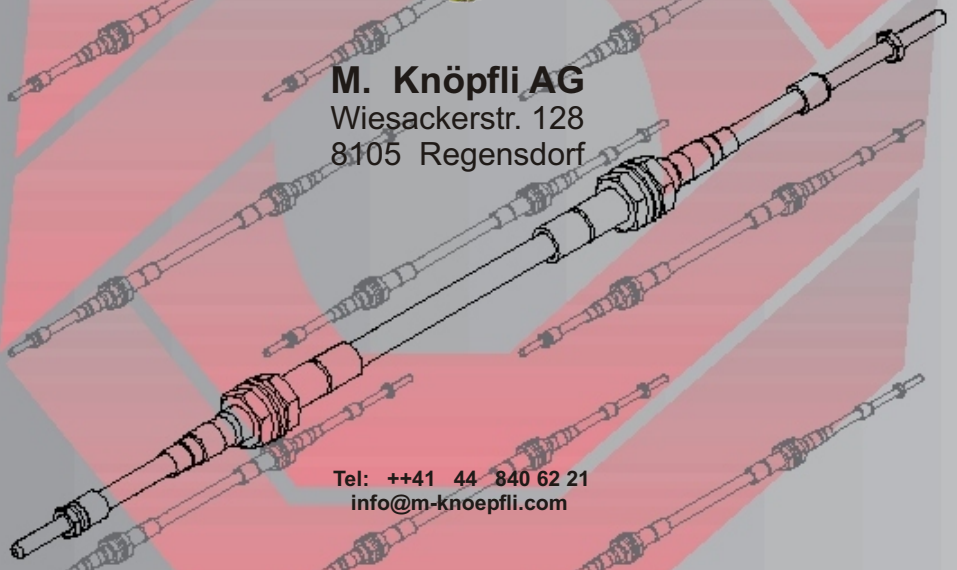

M. Knöpfli AG
Wiesackerstr. 128
8105 Regensdorf
Tel: ++41 44 840 62 21
info@m-knoepfli.com

Manufacturers of ORSCHELN® and FELSTED® products

M. Knöpfli AG
Wiesackerstr. 128
8105 Regensdorf
Tel: ++41 44 840 62 21
info@m-knoepfli.com

Contents:

4. Features and Construction Data.
5. 3 Series Push Pull Cables.
6. 4 Series Push Pull Cables.
7. 4 Series Adjustable Cables.
8. 6 Series Push Pull Cables.
9. 8 Series Push Pull Cables.
10. Knobs and T-Handles
11. 3 Series Light Duty (LD) Universal cables.
12. 3 Series HeavyDuty (HD) Universal cables.
13. 4 Series Universal Cables.
14. 6 Series Universal Cables.
15. 3 Series LD Positive Lock Cables.
16. 3 Series HD Positive Lock Cables.
17. 4 Series Positive Lock Cables.
18. 3 Series Quick Disconnect LD Vernier Cables.
19. 3 Series Quick Disconnect HD Vernier Cables.
20. 4 Series Quick Disconnect Vernier Cables.
21. 3 Series HP Tension Cables.
22. 4 Series HP Tension Cables.
23. 6 Series HP Tension Cables.
24. PTO Cables.
25. RVO Cables.
26. RVC Cables.
27. Special Valve Control Cables.
28. Hardware: Ball Joints, Clevises.
29. Hardware: Pivots, Terminals etc.
30. Hardware: Stop Collars, Clamps/Shims
31. Hardware: Slip links, Field Hub kits.
32. Specifications.
33. Routing/Measuring.
34. Installation Information

M. Knöpfli AG
Wiesackerstr. 128
8105 Regensdorf
Tel: ++41 44 840 62 21
info@m-knoepfli.com

Manufacturers of ORSCHELN® and FELSTED® products

No part of this document is to be copied or disclosed to a third party without the prior written consent of Orscheln Europe.

ORSCHELN EUROPE

Features & Construction

CoreConstructions:

Hi-Performance (HP) 1x7 coated core is available in 3,4 and 6 series cables. HP Core utilizes a unique coating over 1x7 wire rope. This construction offers improved flexibility and higher push loads over core construction.

Solid stainless steel core is available in 3 series push-pull, universal, positive lock and PTO cables. Tension cables Utilize a 1x19 HP coated core, whilst 8 series push-pull retains the armor construction.

Liners:

All Felsted brand cables utilize polymide liners standard HP Cable with a temperature spec Of -54 to +107°C (-65 to + 225 °F) and Heft 2 high temperature variant that can withstand temperatures from -54 to +149°C (-65 to +300°F). Factory lubrication provides optimum core performance without requiring further service.

Note: With quickdisconnect control head cables, though the conduit/core may be rated to +107°C or +149°C, the control head itself is not intended for these temperature ranges.

StrandedConduit

Multiple, oil tempered spring wires are placed in a long lay pattern to protect the liner and inner core, maintain Flexibility, and withstand extreme compressive and tensile loads. This long lay construction results minimal Deflections during cable operation, assuring precise controlling action to the operator.

ConduitJacket

Heavy duty, thick-walled polymer jackets are extruded onto the stranded liner for maximum cable strength. Standard HP Cable material is a HDPE molded to a dark maroon colour. HEFT 2 Jacket, used in high temperature applications, uses a NYLON based material and is moulded into a gloss black colour. Prior to HP Cables, standard jacket colours were black and HEFT was silver in colour.

EndFittings

Corrosion resistant materials are used throughout to provide maximum life. Standard 3,4 and 6 series rods and sl eeves are 300 series stainless steel, while hubs are either stainless or aluminium. The 8 series fittings are plated Steel.

Seals & Boots

High Performance seals are standard on all our HP cables. Durable custom compounded seals are used to prevent moisture and contaminants from entering the cable. The HP seals operate in all temperature extremes, while offering improved performance and efficiency.

Rod & Sleeve Bearing

An exclusive polymer rod and sleeve bearing is used to improve efficiency, sealing and cable life by preventing metal to metal contact between the rod and sleeve. They also accurately align the rod with the seal to insure superior sealing and a long cable life.

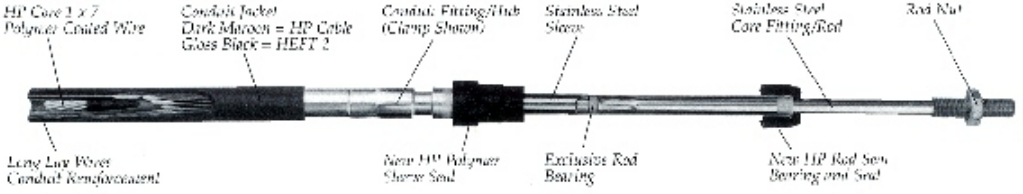

M. Knöpfli AG
Wiesackerstr. 128
8105 Regensdorf
Tel: ++41 44 840 62 21
info@m-knoepfli.com

Manufacturers of ORSCHELN and FELSTED products

No part of this document is to be copied or disclosed to a third party without the prior written consent of Orschein Europe.

ORSCHELN EUROPE

3 SERIES

- & HP Core or Solid Core available.
- & 10-32 Rod Thread (M5 available)
- & 76mm (3") Bend Radii (HP)
- & 152mm (6") Bend Radii (Solid Core)
- & Temperature Range:
  -54 to +107°C Std.
  -54 to +149°C Heft2
- & Low Backlash
- & High Efficiency
- & Conduit Colour:
  Dark Maroon - HP Cable Std.
  Gloss Black - HEFT2

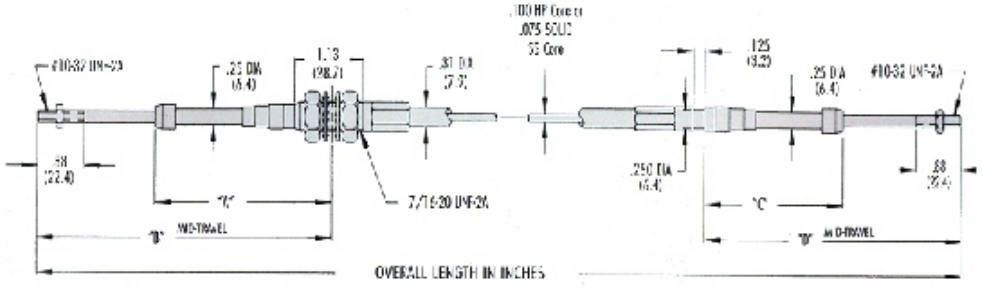

Building a Part Number

Overall Length in MM

Cable Travel
(specified in inches)

Conduit fitting type:
Bulkhead - 2
Clamp - 3
Bulkhead and Clamp on same side - 5

Cable type:
0 = Solid Core
1 = Hi-Performance
2 = Marine (303 st/st fittings + Hardware)
3 = HEFT2 (High performance & High Temperature)
4 = Marine HEFT2

SPECIFICATIONS

Travel	Bulkhead End		Clamp End		Operating Loads	
MM/(Inch)	DIM "A" MM/(Inch)	DIM "B" MM/(Inch)	DIM "C" MM/(Inch)	DIM "D" MM/(Inch)	Push Kg./(N)	Pull Kg./(N)
25.4 (1)	76.2 (3)	112.8 (4.44)	58.7 (2.31)	95.3 (3.75)	36.3 (356)	54.4 (534)
50.8 (2)	101.6 (4)	150.9 (5.94)	84.1 (3.31)	133.4 (5.25)	36.3 (356)	54.4 (534)
76.2 (3)	127.0 (5)	189.0 (7.44)	109.5 (4.31)	171.5 (6.75)	31.7 (311)	54.4 (534)
101.6 (4)	152.4 (6)	227.1 (8.94)	134.9 (5.31)	209.6 (8.25)	27.2 (267)	54.4 (534)
127.0 (5)	177.8 (7)	265.2 (10.44)	160.3 (6.31)	247.7 (9.75)	20.4 (200)	54.4 (534)
152.4 (6)	203.2 (8)	303.3 (11.94)	185.6 (7.31)	285.7(11.25)	15.9 (155.8)	54.4 (534)
177.8 (7)	228.6 (9)	341.4 (13.44)	211.0 (8.31)	323.8 (12.75)	11.4 (111.3)	54.4 (534)

Notes:

Fitting and hardware material for a 100.03XXX.LENGTH cable.

- Conduit fittings:

  Bulkhead = Aluminum
  Clamp = Stainless Steel 303

- Hardware (Nuts/Washers): Steel with Zinc plate

Fitting and hardware material for a 200.03XXX.LENGTH cable.

- Conduit fittings:

  Bulkhead = Stainless Steel (303)
  Clamp = Stainless Steel (303)

- Hardware (Nuts/Washers): Stainless Steel

All rods ends are Stainless Steel (303) for both marine and std cables.

M. Knöpfli AG
Wiesackerstr. 128
8105 Regensdorf
Tel: ++41 44 840 62 21
info@m-knoepfli.com

Manufacturers of ORSCHELN and FELSTED products

No part of this document is to be copied or disclosed to a third party without the prior written consent of Orscheln Europe.

ORSCHELN EUROPE

4 SERIES

- & HP Core
- & 1/4-28 Rod Thread (M6 available)
- & 127mm (5") Bend Radii (HP)

- & Temperature Range:
  -54 to +107°C Std.
  -54 to +149°C Heft2
- & Low Backlash
- & High Efficiency
- & Conduit Colour:
  Dark Maroon - HP Cable Std.
  Gloss Black - HEFT2

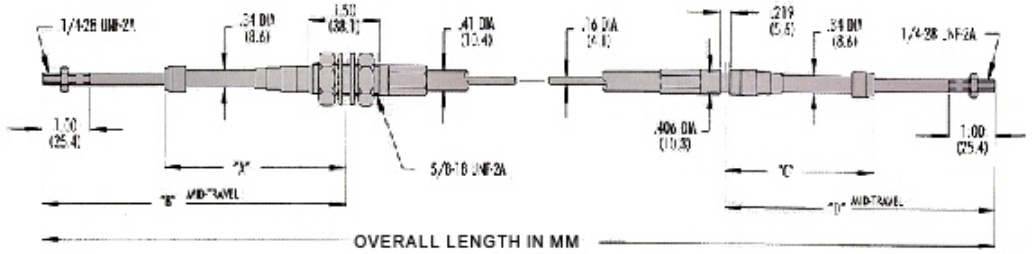

Building a Part Number

	0	0	0	4							

- Cable type:
  1 = Hi-Performance
  2 = Marine (303 st/st fittings + Hardware)
  3 = HEFT2 (High Performance & High Temperature)
  4 = Marine HEFT2
- Cable Travel (specified in inches)
- Conduit fitting type:
  Bulkhead - 2
  Clamp - 3
  Bulkhead and Clamp on same end - 5
- Overall Length in MM

SPECIFICATIONS

Travel	Bulkhead End		Clamp End		Operating Loads	
MM/(Inch)	DIM "A" MM/(Inch)	DIM "B" MM/(Inch)	DIM "C" MM/(Inch)	DIM "D" MM/(Inch)	Push Kg./(N)	Pull Kg./(N)
25.4 (1)	79.5 (3.13)	119.1 (4.69)	63.5 (2.50)	103.1 (4.06)	67.9 (667)	104.3 (1023)
50.8 (2)	140.9 (4.13)	157.2 (6.19)	88.9 (3.50)	141.2 (5.56)	67.9 (667)	104.3 (1023)
76.2 (3)	130.3 (5.13)	195.3 (7.69)	114.3 (4.50)	179.3 (7.06)	56.7 (556)	104.3 (1023)
101.6 (4)	155.7 (6.13)	233.4 (9.19)	139.7 (5.50)	217.4 (8.56)	45.4 (445)	104.3 (1023)
127.0 (5)	181.1 (7.13)	271.5 (10.69)	165.1 (6.50)	255.5 (10.06)	34 (334)	104.3 (1023)
152.4 (6)	206.5 (8.13)	309.6 (12.19)	190.5 (7.50)	293.6 (11.56)	24.9 (244.8)	104.3 (1023)
177.8 (7)	231.9 (9.13)	347.7 (13.6)	215.9 (8.50)	331.7 (13.06)	20.4 (200.3)	104.3 (1023)

Notes:

Fitting and hardware material for a 100.04XXX.LENGTH cable.

- Conduit fittings:
  Bulkhead = Aluminium
  Clamp = Aluminium
- Hardware (Nuts/Washers): Steel with Zinc plate

Fitting and hardware material for a 200.04XXX.LENGTH cable.

- Conduit fittings:
  Bulkhead = Stainless Steel (303)
  Clamp = Stainless Steel (303)
- Hardware (Nuts/Washers): Stainless Steel

All rods ends are Stainless Steel (303) for both marine and std cables.

M. Knöpfli AG
Wiesackerstr. 128
8105 Regensdorf
Tel: ++41 44 840 62 21
info@m-knoepfli.com

Manufacturers of ORSCHELN® and FELSTED® products

No part of this document is to be copied or disclosed to a third party without the prior written consent of Orscheln Europe.

ORSCHELN EUROPE

4 Adjustable series

- & Adjustable Hubs
- & 127 (5") Bend Radii (HP)
- & ¼" UNF Threaded Rods (M6 available)
- & Applications: where extended adjustment is required.
- & Temperature Range:
  -54 to +107°C Std.
  -54 to +149°C Heft2
- & HP=Low Backlash,
  High Efficiency,
  Best Flexibility.
- & Conduit Colour:
  Dark Maroon - HP Cable Std.
  Gloss Black - HEFT2

Building a Part Number

		0	0	0	4									

Overall Length in MM

Cable Travel (specified in inches)

Conduit fitting type:
Bulkhead - 2
Clamp - 3
Bulkhead and Clamp on same end - 5
Adjustable - 4

Cable type:
1 = Hi-Performance
3 = HEFT2 (High Performance & High Temperature)

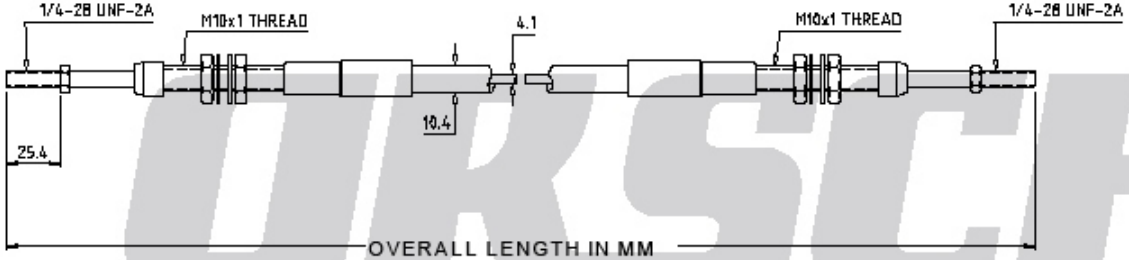

Operating Loads are as per 4series Push Pull Cables.

Adjustable Cables are also available in 3 and 6 series:
Please call for details.

Notes:

Fitting and hardware material for a 100.04XXX.LENGTH cable.

- Conduit fittings:

  Bulkhead = Aluminium
  Clamp = Aluminium
  Adjustable = Steel with Zinc plate

- Hardware (Nuts/Washers): Steel with Zinc plate

- All rods ends are Stainless Steel (303).

- Deflection:

  Unlike our standard HP Push Pull Cables, adjustable cable sleeves do not swivel 8° about the center line. Instead, the deflection is provided by using swivel assemblies, which are fitted to the adjustable barrel. Please call for details.

M. Knöpfli AG
Wiesackerstr. 128
8105 Regensdorf
Tel: ++41 44 840 62 21
info@m-knoepfli.com

Manufacturers of ORSCHELN and FELSTED products

No part of this document is to be copied or disclosed to a third party without the prior written consent of Orscheln Europe.

ORSCHELN® EUROPE

6 series

- & HP Core
- & 5/16-24 Rod Thread (M8 available)
- & 177.8mm (7") Bend Radii (HP)

- & Temperature Range:
  -54 to +107°C Std.
  -54 to +149°C Heft2
- & Low Backlash
- & High Efficiency
- & Conduit Colour:
  Dark Maroon - HP Cable Std.
  Gloss Black - HEFT2

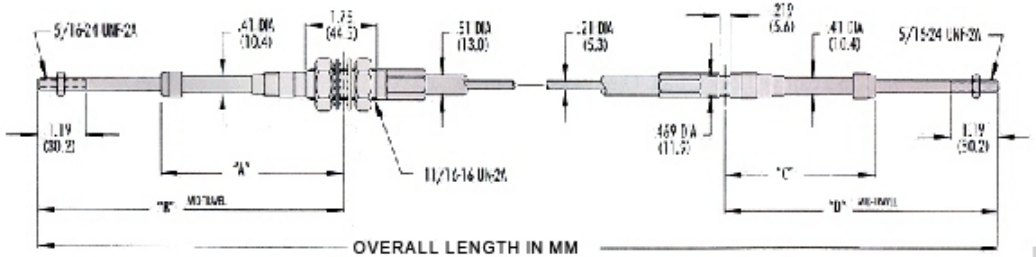

Building a Part Number

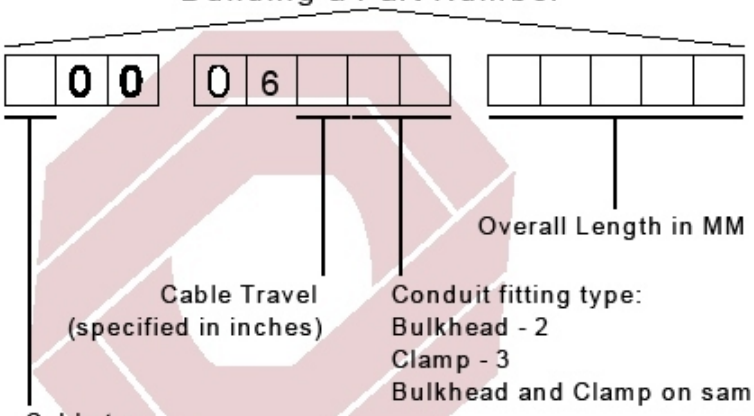

SPECIFICATIONS

Travel	Bulkhead End		Clamp End		Operating Loads	
MM/(Inch)	DIM "A" MM/(Inch)	DIM "B" MM/(Inch)	DIM "C" MM/(Inch)	DIM "D" MM/(Inch)	Push Kg./(N)	Pull Kg./(N)
25.4 (1)	82.6 (3.25)	127.0 (5.00)	65.0 (2.56)	109.5 (4.31)	113.5 (1112)	181.4 (1779)
50.8 (2)	108.0 (4.25)	165.1 (6.50)	90.4 (3.56)	147.6 (5.81)	113.5 (1112)	181.4 (1779)
76.2 (3)	133.4 (5.25)	203.2 (8.00)	115.8 (4.56)	185.7 (7.31)	95.3 (935)	181.4 (1779)
101.6 (4)	158.8 (6.25)	241.3 (9.50)	141.2 (5.56)	223.8 (8.81)	77.1 (756.5)	181.4 (1779)
127.0 (5)	184.2 (7.25)	279.4 (11.00)	166.6 (6.56)	261.9 (10.31)	58.9 (578.5)	181.4 (1779)
152.4 (6)	209.6 (8.25)	317.5 (12.50)	192.0 (7.56)	299.9 (11.81)	40.8 (400.5)	181.4 (1779)
177.8 (7)	235.0 (9.25)	355.6 (14.00)	217.4 (8.56)	338.0 (13.31)	27.2 (266.9)	181.4 (1779)

Notes:

Fitting and hardware material for a 100.06XXX.LENGTH cable.

- Conduit fittings:

  Bulkhead = Aluminium
  Clamp = Aluminium

- Hardware (Nuts/Washers): Steel with Zinc plate

Fitting and hardware material for a 200.06XXX.LENGTH cable.

- Conduit fittings:

  Bulkhead = Stainless Steel (303)
  Clamp = Stainless Steel (303)

- Hardware (Nuts/Washers): Stainless Steel

All rods ends are Stainless Steel (303) for both marine and std cables.

M. Knöpfli AG
Wiesackerstr. 128
8105 Regensdorf
Tel: ++41 44 840 62 21
info@m-knoepfli.com

Manufacturers of ORSCHELN® and FELSTED® products

No part of this document is to be copied or disclosed to a third party without the prior written consent of Orscheln Europe.

ORSCHELN EUROPE

8 SERIES

- & HP Core
- & 3/8-24 Rod Thread
- & 254mm (10") Bend Radii (Armour)
- & Temperature Range: -54 to +107°C Std.
- & Low Backlash
- & High Efficiency
- & Conduit Colour: Dark Maroon

Building a Part Number

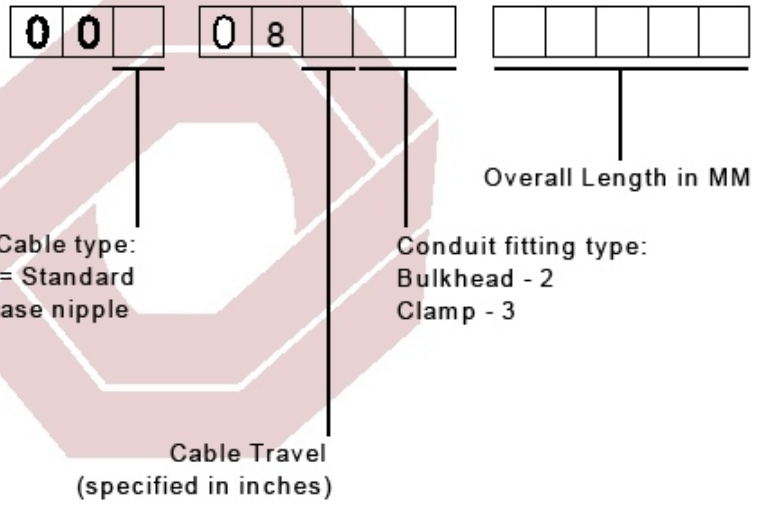

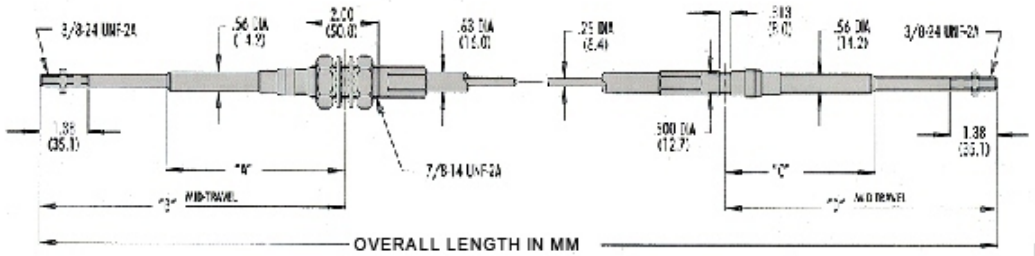

SPECIFICATIONS

Travel	Bulkhead End		Clamp End		Operating Loads	
MM/(Inch)	DIM "A" MM/(Inch)	DIM "B" MM/(Inch)	DIM "C" MM/(Inch)	DIM "D" MM/(Inch)	Push Kg./(N)	Pull Kg./(N)
25.4 (1)	93.7 (3.69)	141.2 (5.56)	81.0 (3.19)	128.5 (5.06)	317.5 (3114)	453.6 (4449)
50.8 (2)	119.1 (4.69)	179.3 (7.06)	106.4 (4.19)	166.6 (6.56)	317.5 (3114)	453.6 (4449)
76.2 (3)	144.5 (5.69)	217.4 (8.56)	131.8 (5.19)	204.7 (8.06)	272.2 (2669)	453.6 (4449)
101.6 (4)	169.9 (6.69)	255.5 (10.06)	157.2 (6.19)	242.8 (9.56)	226.7 (2224)	453.6 (4449)
127.0 (5)	195.3 (7.69)	293.6 (11.56)	182.6 (7.19)	280.9 (11.06)	181.4 (1779)	453.6 (4449)
152.4 (6)	220.7 (8.69)	331.7 (13.06)	208.0 (8.19)	319.0 (12.56)	124.7 (1223)	453.6 (4449)
177.8 (7)	246.1 (9.69)	369.8 (14.56)	233.4 (9.19)	357.1 (14.06)	68.0 (667.5)	453.6 (4449)

Notes:

Fitting and hardware material for a 003.08XXX.LENGTH cable.

- Conduit fittings:

  Bulkhead = Aluminium
  Clamp = Aluminium
- Hardware (Nuts/Washers): Steel with Zinc plate
- Rod Ends: Steel with Zinc plate

Note: Marine 8srs also available upon request.

M. Knöpfli AG
Wiesackerstr. 128
8105 Regensdorf
Tel: ++41 44 840 62 21
info@m-knoepfli.com

Manufacturers of ORSCHELN and FELSTED products

No part of this document is to be copied or disclosed to a third party without the prior written consent of Orscheln Europe.

ORSCHELN EUROPE

Knobs & T-Handles

Knobs
Rugged Phenolic Material

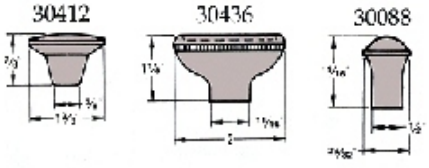

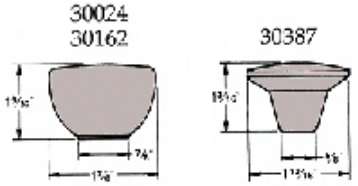

Base Part No.:	Colour	Legend I.D.	Thread Size
30024-0	Black	01	1
30088-1	Black	01	1
30088-2	Red	01	1
30162-0	Red	06	1
30387-1	Black	01	1
30387-2	Red	01	1
30412-0	Black	01	1
30436-0	Black	01	1

Refer to "Building a Part Number" at right.
Knobs limited to above legend identification and thread size combinations.

T-Handles
Tough Nylon Material

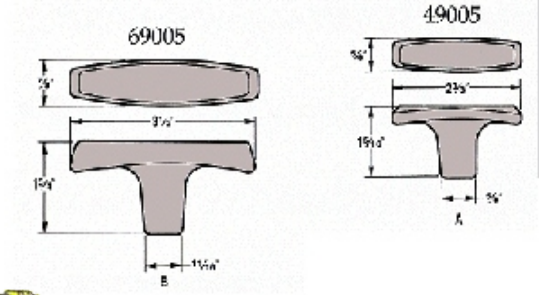

Base Part No.:	Colour
49005-1	Black
49005-2	Red
69005-1	Black
69005-2	Red

Refer to "Building a Part Number" at right.

Building a Part Number

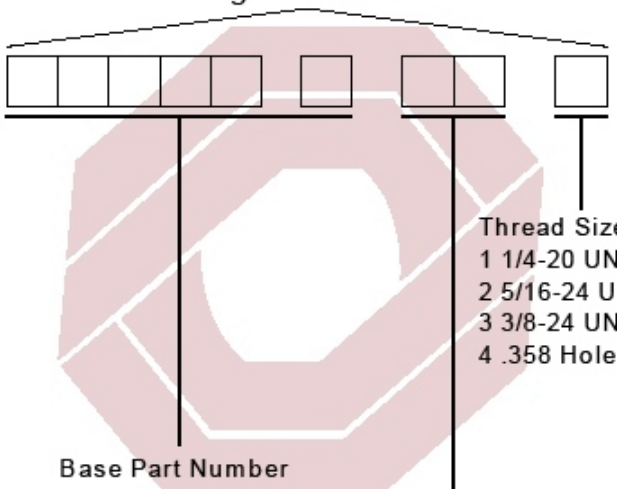

Thread Size
1 1/4-20 UNC-2B
2 5/16-24 UNF-2B
3 3/8-24 UNF-2B
4 .358 Hole With Set Screw

Base Part Number

Legend Identification

01 Plain11 Cold Start19 Overdrive
02 Stop12 Pump20 Aux. Release
03 Shut-Off13 Chute [LOCK]
04 Throttle14 Fire21 Rear Door
05 Choke15 Start [LOCK]
06 PTO16 Hood22 Throttle
07 Emergency Stop17 Emergency Fuel [LOCK]
08 Engine Stop Shut-Off 23 Hatch
09 [LOCK) [LOCK]
10 Disconnect

Notes:

- For additional legend or international symbols please contact us on +44 1788 561400.
- To order Positive Lock Spare Handle 49005-1094 with set screw please use part number 30073.

M. Knöpfli AG
Wiesackerstr. 128
8105 Regensdorf
Tel: ++41 44 840 62 21
info@m-knoepfli.com

Manufacturers of ORSCHELN and FELSTED products

No part of this document is to be copied or disclosed to a third party without the prior written consent of Orscheln Europe.

ORSCHELN EUROPE

3 UNIVERSAL LD SERIES

- & Light Duty
- & Exposed core
- & 76mm (3") Bend Radii (HP)
- & 152mm (6") Bend Radii (Solid Core)
- & Order handle/knob separately
- & Non-metallic liners

- & Applications: Throttle, Choke, Engine stop, Fuel shut-off & Latches.
- & Temperature Range:
  -54 to +107°C Std.
  -54 to +149°C Heft2
- & Low Backlash
- & High Efficiency
- & Conduit Colour:

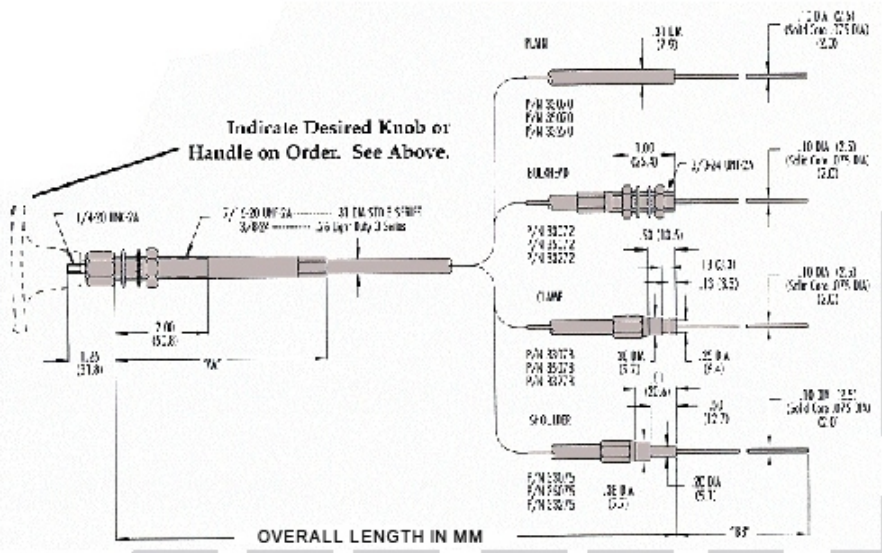

Building a Part Number

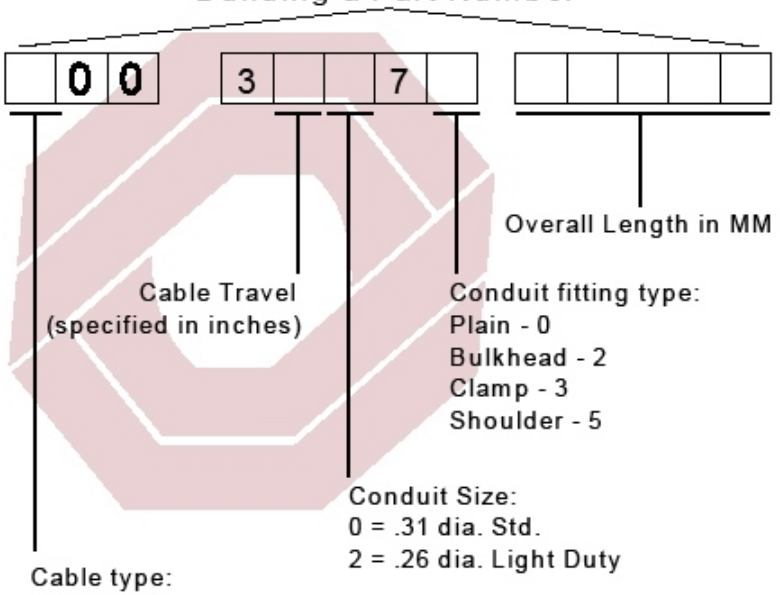

SPECIFICATIONS

Travel Inch/(MM)	DIM "AA" Inch/(MM)	DIM "BB" Inch/(MM)
76.2 (3.00)	76.2 (3.00)	76.2 (3.00)
127.0 (5.0)	165.1 (6.50)	203.2 (8.00)

Notes:

Fitting and hardware material for a 100.3XX7X.LENGTH cable.

- Conduit fittings:

  Utility (DIM "AA") = Aluminium
  Bulkhead = Aluminum
  Clamp = Stainless Steel 303
  Shoulder = Steel with Zinc plate

- Hardware (Nuts/Washers): Steel with Zinc plate
- Rods: Stainless Steel 303

M. Knöpfli AG
Wiesackerstr. 128
8105 Regensdorf
Tel: ++41 44 840 62 21
info@m-knoepfli.com

Manufacturers of ORSCHELN® and FELSTED® products

No part of this document is to be copied or disclosed to a third party without the prior written consent of Orscheln Europe.

ORSCHELN EUROPE

3 UNIVERSAL SERIES

- & Heavy Duty
- & 10-32 Rod Thread (M5 available)
- & 76mm (3") Bend Radii (HP)
- & 152mm (6") Bend Radii (Solid Core)
- & Applications: throttle, choke, engine stop, fuel shut-off, latches.
- & Temperature Range:
  -54 to +107°C Std.
  -54 to +149°C Heft2
- & Low Backlash
- & High Efficiency
- & Conduit Colour:
  Dark Maroon - HP Cable Std.
  Gloss Black - HEFT2

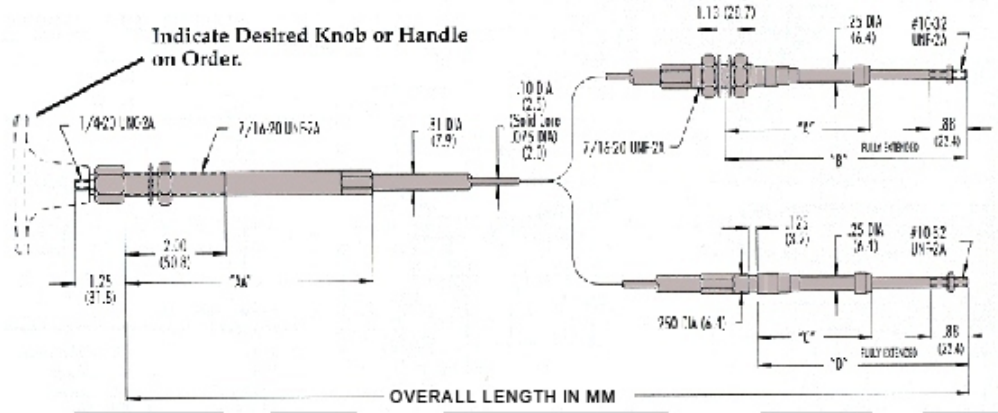

Building a Part Number

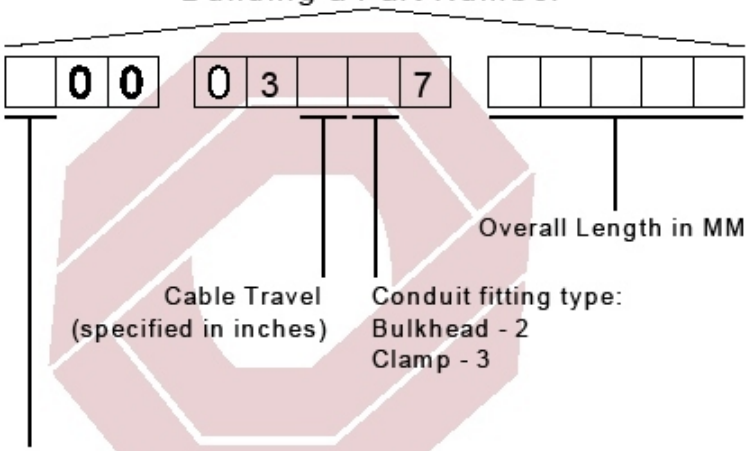

SPECIFICATIONS

Travel	DIM "AA"	Bulkhead End		Clamp End		Operating Loads	
MM/(Inch)	MM/(Inch)	DIM "AA" MM/(Inch)	DIM "B" MM/(Inch)	DIM "C" MM/(Inch)	DIM "D" MM/(Inch)	Push Kg./(N)	Pull Kg./(N)
25.4 (1)	114.3 (4.50)	76.2 (3.00)	125.5 (4.94)	58.7 (2.31)	108.0 (4.25)	27.2 (266.9)	27.2 (266.9)
50.8 (2)	114.3 (4.50)	101.6 (4.00)	176.3 (6.94)	84.1 (3.31)	158.8 (6.25)	27.2 (266.9)	27.2 (266.9)
76.2 (3)	114.3 (4.50)	127.0 (5.00)	227.1 (8.94)	109.5 (4.31)	209.6 (8.25)	22.7 (222.5)	27.2 (266.9)
101.6 (4)	165.1 (6.50)	152.4 (6.00)	277.9 (10.94)	134.9 (5.31)	260.4 (10.25)	18.1 (177.9)	27.2 (266.9)
127.0 (5)	165.1 (6.50)	177.8 (7.00)	328.7 (12.94)	160.3 (6.31)	311.2(12.25)	13.6 (133.5)	27.2 (266.9)

Notes:

Fitting and hardware material for a 100.03XX7.LENGTH cable.

- Conduit fittings:

  Universal = Aluminium (used on all variants)
  Bulkhead = Aluminium
  Clamp = Stainless Steel 303
- Hardware (Nuts/Washers): Steel with Zinc plate
- Rods: Stainless Steel 303

M. Knöpfli AG
Wiesackerstr. 128
8105 Regensdorf
Tel: ++41 44 840 62 21
info@m-knoepfli.com

Manufacturers of ORSCHELN and FELSTED products

No part of this document is to be copied or disclosed to a third party without the prior written consent of Orscheln Europe.

ORSCHELN EUROPE

4 UNIVERSAL SERIES

- & Heavy Duty
- & 1/4-28 Rod Thread (M6 available)
- & 127mm (5") Bend Radii (HP)
- & Applications:
- & Temperature Range:
  -54 to +107°C Std.
  -54 to +149°C Heft2
- & Low Backlash
- & High Efficiency
- & Conduit Colour:
  Dark Maroon - HP Cable Std.
  Gloss Black - HEFT2

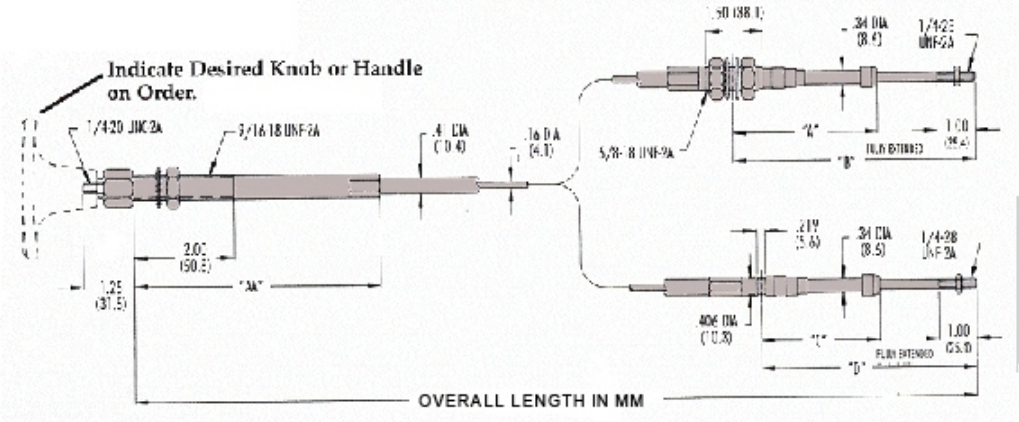

Building a Part Number

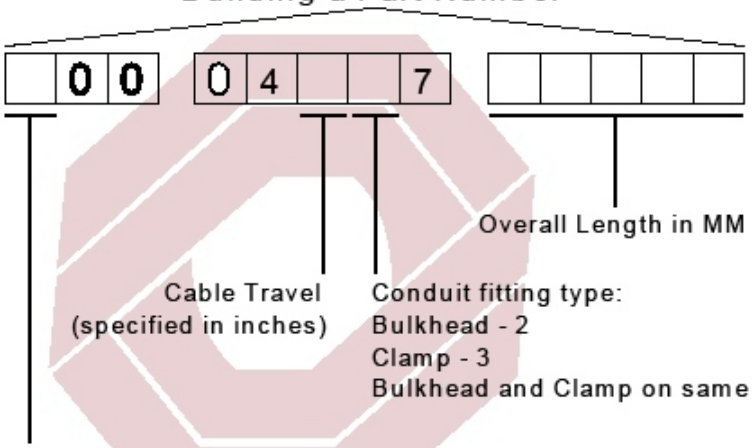

SPECIFICATIONS

Travel MM/(Inch)	DIM "AA" MM/(Inch)	Bulkhead End DIM "AA" MM/(Inch)	Bulkhead End DIM "B" MM/(Inch)	Clamp End DIM "C" MM/(Inch)	Clamp End DIM "D" MM/(Inch)	Operating Loads Push Kg./(N)	Operating Loads Pull Kg./(N)
25.4 (1)	131.8 (5.19)	79.5 (3.13)	131.8 (5.19)	63.5 (2.50)	115.8 (4.56)	54.4 (533.9)	54.4 (533.9)
50.8 (2)	131.8 (5.19)	104.9 (4.00)	182.6 (7.19)	88.9 (3.50)	166.6 (6.56)	54.4 (533.9)	54.4 (533.9)
76.2 (3)	131.8 (5.19)	130.3 (5.13)	233.4 (9.19)	114.3 (4.50)	217.4 (8.56)	45.4 (444.9)	54.4 (533.9)
101.6 (4)	182.6 (7.19)	155.7 (6.13)	284.2 (11.19)	139.7 (5.50)	268.2 (10.56)	36.3 (355.9)	54.4 (533.9)
127.0 (5)	182.6 (7.19)	181.1 (7.13)	335.0 (13.19)	165.1 (6.50)	319.0 (12.56)	27.2 (266.9)	54.4 (533.9)

Notes:

Fitting and hardware material for a 100.04XX7.LENGTH cable.

- Conduit fittings:
  Universal = Aluminium
  Bulkhead = Aluminum
  Clamp = Aluminum
- Hardware (Nuts/Washers): Steel with Zinc plate
- Rods: Stainless Steel 303

M. Knöpfli AG
Wiesackerstr. 128
8105 Regensdorf
Tel: ++41 44 840 62 21
info@m-knoepfli.com

Manufacturers of ORSCHELN and FELSTED products

No part of this document is to be copied or disclosed to a third party without the prior written consent of Orscheln Europe.

ORSCHELN EUROPE

6 UNIVERSAL SERIES

- & Heavy Duty
- & 5/16-24 Rod Thread (M8 available)
- & 177.8mm (7") Bend Radii (HP)
- & Temperature Range:
  -54 to +107°C Std.
  -54 to +149°C Heft2
- & Low Backlash
- & High Efficiency
- & Conduit Colour:
  Dark Maroon - HP Cable Std.
  Gloss Black - HEFT2

Building a Part Number

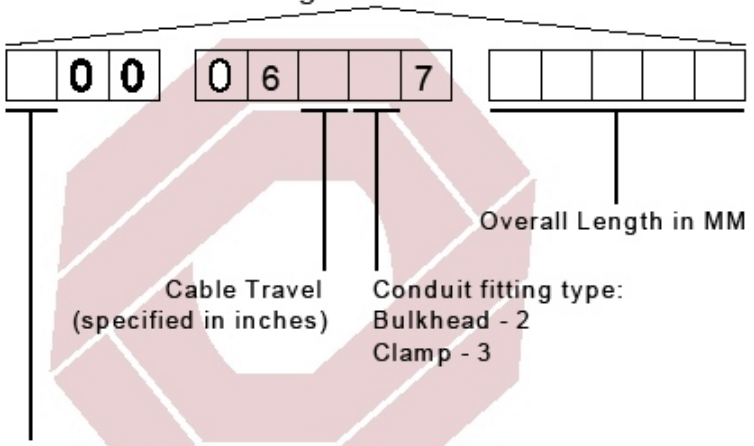

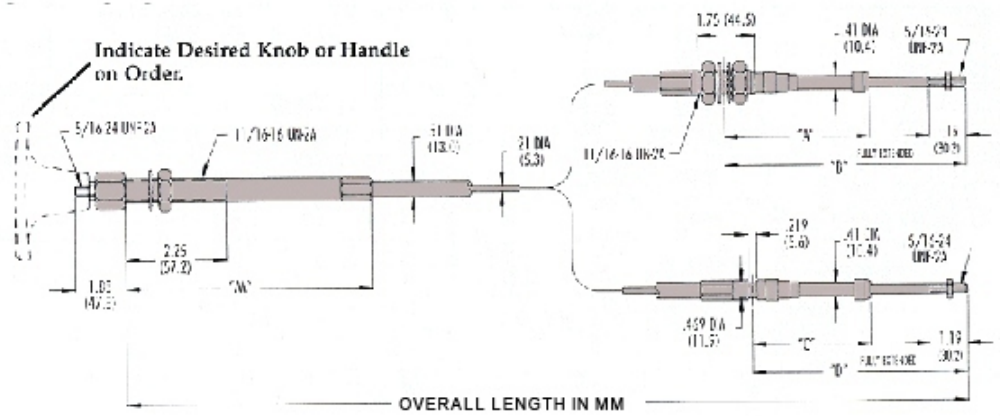

SPECIFICATIONS

Travel MM/(Inch)	DIM "AA" MM/(Inch)	Bulkhead End DIM "AA" MM/(Inch)	Bulkhead End DIM "B" MM/(Inch)	Clamp End DIM "C" MM/(Inch)	Clamp End DIM "D" MM/(Inch)	Operating Loads Push Kg./(N)	Operating Loads Pull Kg./(N)
25.4 (1)	131.8 (5.19)	82.6 (3.25)	139.7 (5.50)	65.0 (2.56)	122.2 (4.81)	102.1 (1001)	102.1 (1001)
50.8 (2)	131.8 (5.19)	108.0 (4.25)	190.5 (7.50)	90.4 (3.56)	173.0 (6.81)	102.1 (1001)	102.1 (1001)
76.2 (3)	131.8 (5.19)	133.4 (5.25)	241.3 (9.50)	115.8 (4.56)	223.8 (8.81)	90.7(889.9)	102.1 (1001)
101.6 (4)	182.6 (7.19)	158.8 (6.25)	292.1 (11.50)	141.2 (5.56)	274.6 (10.81)	79.4 (778.7)	102.1 (1001)
127.0 (5)	182.6 (7.19)	184.2 (7.25)	342.9 (13.50)	166.6 (6.56)	299.9 (11.81)	68.0 (667.5)	102.1 (1001)

Notes:

Fitting and hardware material for a 100.06XX7.LENGTH cable.

- Conduit fittings:
  Bulkhead = Aluminum
  Clamp = Aluminum
- Hardware (Nuts/Washers): Steel with Zinc plate
- Rods: Stainless Steel 303

M. Knöpfli AG
Wiesackerstr. 128
8105 Regensdorf
Tel: ++41 44 840 62 21
info@m-knoepfli.com

Manufacturers of ORSCHELN and FELSTED products

No part of this document is to be copied or disclosed to a third party without the prior written consent of Orscheln Europe.

ORSCHELN EUROPE

3 Series Positive Lock LD

- & Light Duty
- & Exposed Core
- & 76mm (3") Bend Radii (HP)
- & 152mm (6") Bend Radii (Solid Core)
- & T-Handle locks in any direction
- & Applications: Throttle, choke, engine Stop, fuel shut-off, latches.
- & Also available in quick disconnect form.
- & Temperature Range:
  -54 to +107°C Std.
  -54 to +149°C Heft2
- & Low Backlash
- & High Efficiency
- & Conduit Colour:
  Dark Maroon - HP Cable Std.
  Gloss Black - HEFT2

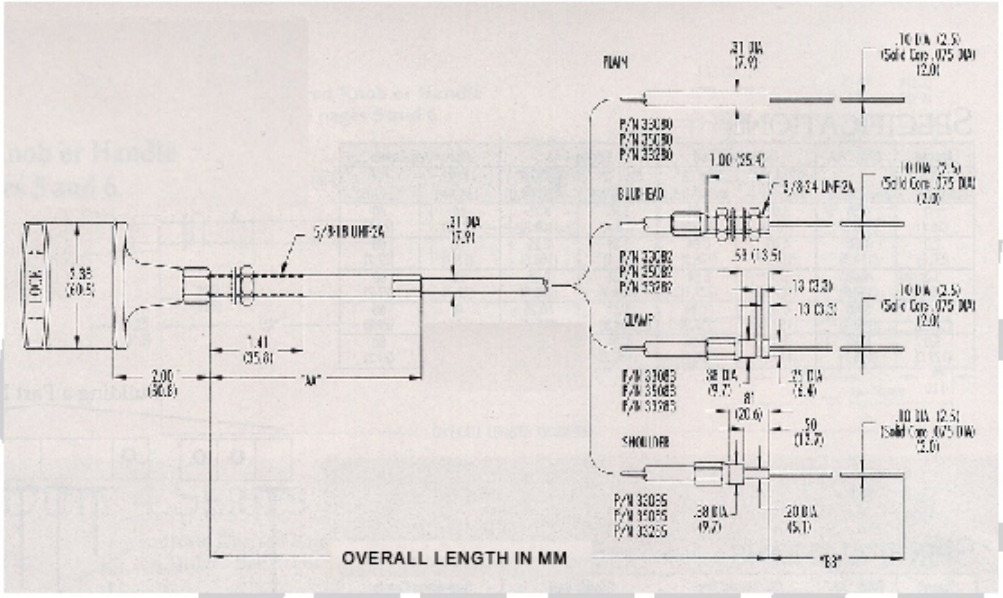

Building a Part Number

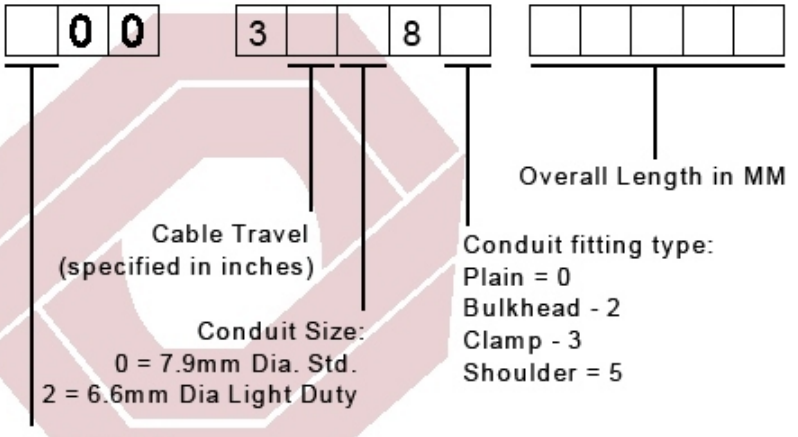

Cable type:
0 = Solid Core
1 = Hi-Performance
2 = Marine
3 = HEFT2 (High performance & High Temperature)
4 = Marine HEFT2

Notes:

Fitting and hardware material for a 100.3XX8X.LENGTH cable.

- Conduit fittings:

  Universal = Aluminium
  Bulkhead = Aluminium
  Clamp = Stainless Steel 303
  Shoulder = Steel with Zinc plate

- Hardware (Nuts/Washers): Steel with Zinc plate

Fitting and hardware material for a 200.3XX8X.LENGTH cable.

- Conduit fittings:

  Universal = Stainless Steel 303
  Bulkhead = Stainless Steel 303
  Clamp = Stainless Steel 303
  Shoulder = Stainless Steel 303

- Hardware (Nuts/Washers): Stainless Steel

SPECIFICATIONS

Travel MM/(Inch)	DIM "AA" MM/(Inch)	DIM "BB" MM/(Inch)
76.2 (3.00)	133.4 (5.25)	127.0 (5.00)
127.0 (5.00)	184.2 (7.25)	203.2 (8.00)

M. Knöpfli AG
Wiesackerstr. 128
8105 Regensdorf
Tel: ++41 44 840 62 21
info@m-knoepfli.com

Manufacturers of ORSCHELN and FELSTED products

No part of this document is to be copied or disclosed to a third party without the prior written consent of Orscheln Europe.

ORSCHELN EUROPE

3 Series Positive Lock HD

- & Heavy Duty
- & Exposed Core
- & 76mm (3") Bend Radii (HP)
- & 152mm (6") Bend Radii (Solid Core)
- & 10-32 Rod Thread (M5 available)
- & T-Handle locks in any direction
- & Applications: Throttle, choke, engine Stop, fuel shut-off, latches.
- & Temperature Range:
  -54 to +107°C Std.
  -54 to +149°C Heft2
- & Low Backlash
- & High Efficiency
- & Conduit Colour:
  Dark Maroon - HP Cable Std.
  Gloss Black - HEFT2

Building a Part Number

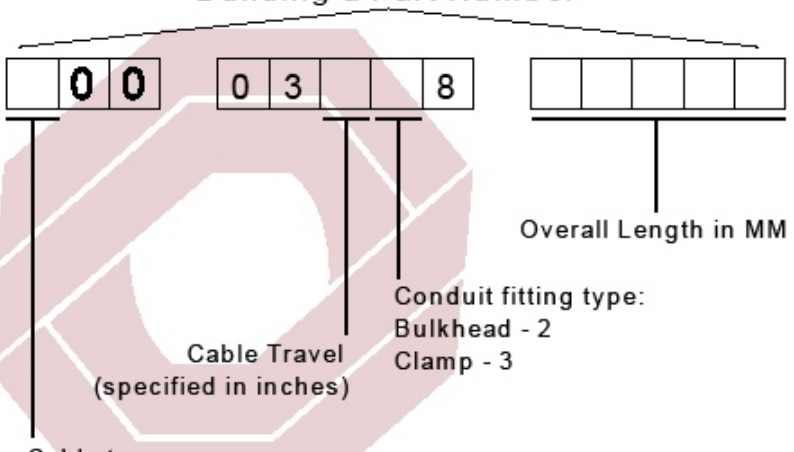

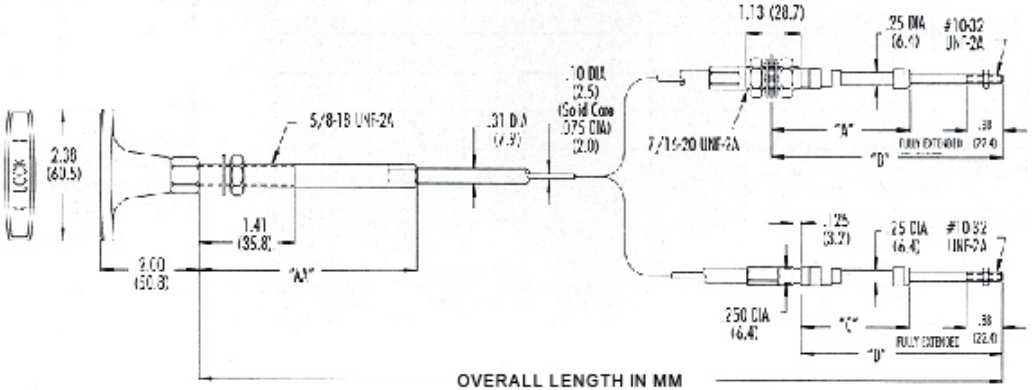

Travel MM/(Inch)	DIM "AA" MM/(Inch)	Bulkhead End		Clamp End		Operating Loads	
		DIM "AA" MM/(Inch)	DIM "B" MM/(Inch)	DIM "C" MM/(Inch)	DIM "D" MM/(Inch)	Push Kg./(N)	Pull Kg./(N)
25.4 (1)	133.4 (5.25)	76.2 (3.00)	125.5 (4.94)	58.7 (2.31)	108.0 (4.25)	27.2 (266.9)	27.2 (266.9)
50.8 (2)	133.4 (5.25)	101.6 (4.00)	176.3 (6.94)	84.1 (3.31)	158.8 (6.25)	27.2 (266.9)	27.2 (266.9)
76.2 (3)	133.4 (5.25)	127.0 (5.00)	227.1 (8.94)	109.5 (4.31)	209.6 (8.25)	22.7 (222.5)	27.2 (266.9)
101.6 (4)	184.2 (7.25)	152.4 (6.00)	277.9 (10.94)	134.9 (5.31)	260.4 (10.25)	18.1 (177.9)	27.2 (266.9)
127.0 (5)	184.2 (7.25)	177.8 (7.00)	328.7 (12.94)	160.3 (6.31)	311.2(12.25)	13.6 (133.5)	27.2 (266.9)

Notes:

Fitting and hardware material for a 100.03XX8.LENGTH cable.

- Conduit fittings:
  Bulkhead = Aluminum
  Clamp = Stainless Steel 303
- Hardware (Nuts/Washers): Steel with Zinc plate
- Rods: Stainless Steel 303

M. Knöpfli AG
Wiesackerstr. 128
8105 Regensdorf
Tel: ++41 44 840 62 21
info@m-knoepfli.com

Manufacturers of ORSCHELN and FELSTED products

No part of this document is to be copied or disclosed to a third party without the prior written consent of Orscheln Europe.

ORSCHELN EUROPE

4 Series — Positive Lock HD

- & Heavy Duty
- & 127mm (5") Bend Radii (HP)
- & 1/4-28 Rod Thread (M6 available)
- & T-Handle locks in any direction
- & Applications: Throttle, choke, engine Stop, fuel shut-off, latches.
- & Also available in quick disconnect form.
- & Temperature Range:
  -54 to +107°C Std.
  -54 to +149°C Heft2
- & Low Backlash
- & High Efficiency
- & Conduit Colour:
  Dark Maroon - HP Cable Std.
  Gloss Black - HEFT2

Building a Part Number

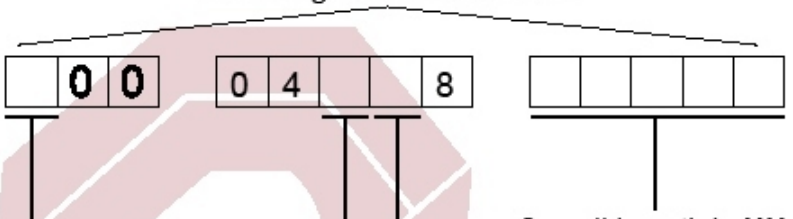

Cable type:
0 = Solid Core
1 = Hi-Performance
3 = HEFT2 (High performance & High Temperature)

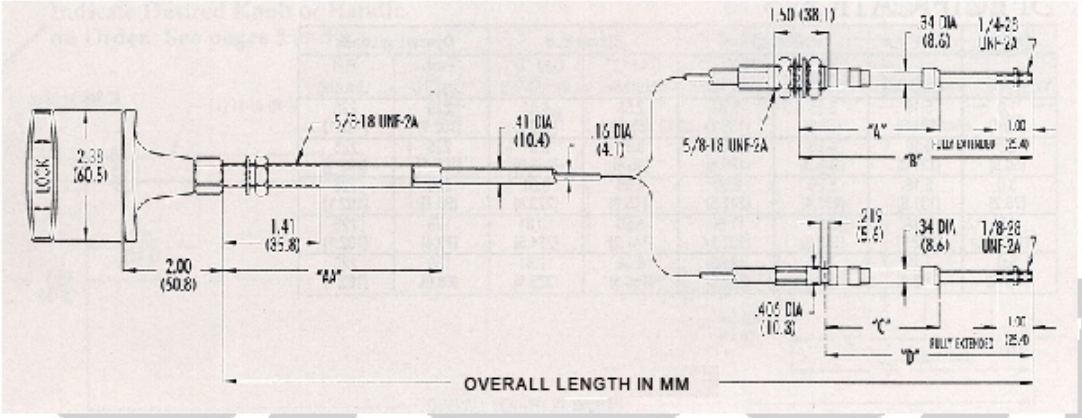

Travel	DIM "AA"	Bulkhead End		Clamp End		Operating Loads	
MM/(Inch)	MM/(Inch)	DIM "AA" MM/(Inch)	DIM "B" MM/(Inch)	DIM "C" MM/(Inch)	DIM "D" MM/(Inch)	Push Kg./(N)	Pull Kg./(N)
25.4 (1)	133.4 (5.25)	79.5 (3.13)	131.8 (5.19)	63.5 (2.50)	115.8 (4.56)	54.4 (534.4)	54.4 (534.4)
50.8 (2)	133.4 (5.25)	104.9 (4.13)	182.6 (7.19)	88.9 (3.50)	166.6 (6.56)	54.4 (534.4)	54.4 (534.4)
76.2 (3)	133.4 (5.25)	130.3 (5.13)	233.4 (9.19)	114.3 (4.50)	217.4 (8.56)	45.4 (445.4)	54.4 (534.4)
101.6 (4)	184.2 (7.25)	155.7 (6.13)	284.2 (11.19)	139.7 (5.50)	268.2 (10.56)	36.32 (356.3)	54.4 (534.4)
127.0 (5)	184.2 (7.25)	181.1 (7.13)	335.0 (13.19)	165.1 (6.50)	319.0(12.56)	27.2 (267.2)	54.4 (534.4)

Notes:

Fitting and hardware material for a 100.04XX8.LENGTH cable.

- Conduit fittings:
  Bulkhead = Aluminium
  Clamp = Aluminium
- Hardware (Nuts/Washers): Steel with Zinc plate
- Rods: Stainless Steel 303

M. Knöpfli AG
Wiesackerstr. 128
8105 Regensdorf
Tel: ++41 44 840 62 21
info@m-knoepfli.com

Manufacturers of ORSCHELN and FELSTED products

No part of this document is to be copied or disclosed to a third party without the prior written consent of Orscheln Europe.

ORSCHELN® EUROPE

3 Series

Quick Disconnect LD

- & Light Duty
- & Exposed Core
- & 76mm (3") Bend Radii (HP)
- & 152mm (6") Bend Radii (Solid Core)
- & Applications: engine RPM, or where coarse or fine adjustments are needed.
- & Temperature Range:
  -54 to +107°C Std.
  -54 to +149°C Heft2
- & HP Core=Low Backlash,
  High Efficiency,
  Best Flexibility.
- & Conduit Colour:
  Dark Maroon - HP Cable Std.
  Gloss Black - HEFT2

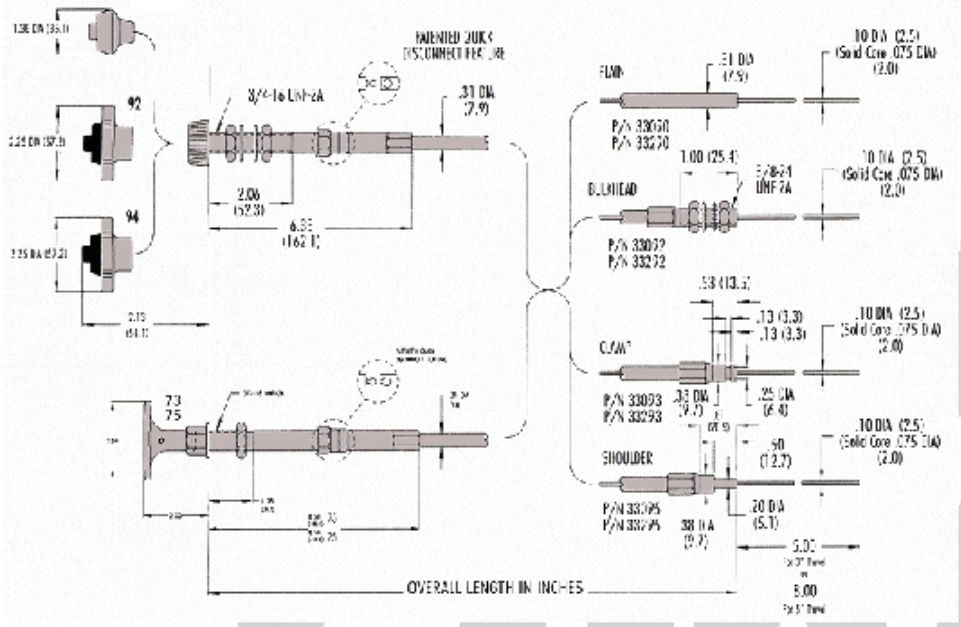

Load Rating: Maximum 20lbs. Is recommended.

Building a Part Number

	0	0	3	3		9						

Overall Length in MM

Conduit Fitting Type:
0 = Plain
2 = Bulkhead
3 = Clamp
5 = Shoulder

Head Type:
00 None - Cable Only
90 Vernier - Black Button - Black Knob
92 Vernier - Black Button - Black Knob
94 Vernier - Red Button - Black Knob
73 Positive Lock - 3" Travel
75 Positive Lock - 5" Travel

Conduit Size:
0 = 7.84(.31") dia. Std.
2 = 6.60(.26") dia. Light Duty

Cable type:
0 = Solid Core (3 Series only)
1 = Hi-Performance
2 = Marine
3 = HEFT2 (High performance & High Temperature)
4 = Marine HEFT2

Notes:

Fitting and hardware material for a 100.33X9X.LENGTH cable.

- Conduit fittings:
  Disconnect Hub = Aluminium
  Bulkhead = Aluminum
  Clamp = Stainless Steel 303
  Shoulder = Steel with Zinc plate
- Hardware (Nuts/Washers): Steel with Zinc plate
- Rods: Stainless Steel 303
- To Order
  Vernier and Positive Lock cable control heads may be ordered as acomplete assembly (head and cable attached) or separately. Order the desired control head using the two digit number 0,92,94,73 or 75 (Positive Lock head). Order the cable using the five digit number from "Building a Part Number". To order a complete assembly, combine the control head number with the desired cable number. Example: if you desire control head No. 94 and cable No. 33092, then combine to make the assembly part No.: X94-33092-length.

M. Knöpfli AG
Wiesackerstr. 128
8105 Regensdorf
Tel: ++41 44 840 62 21
info@m-knoepfli.com

Manufacturers of ORSCHELN® and FELSTED® products

No part of this document is to be copied or disclosed to a third party without the prior written consent of Orscheln Europe.

ORSCHELN EUROPE

3 SERIES

Quick Disconnect HD

- & Heavy Duty
- & 76mm (3") Bend Radii (HP)
- & 152mm (6") Bend Radii (Solid Core)
- & Applications: engine RPM, or where coarse or fine adjustments are needed.
- & Temperature Range:
  -54 to +107°C Std.
  -54 to +149°C Heft2
- & HP=Low Backlash,
  High Efficiency,
  Best Flexibility.
- & Conduit Colour:
  Dark Maroon - HP Cable Std.
  Gloss Black - HEFT2

HEAD OPTIONS ARE AS 3SRS LIGHT DUTY (PREVIOUS PAGE).

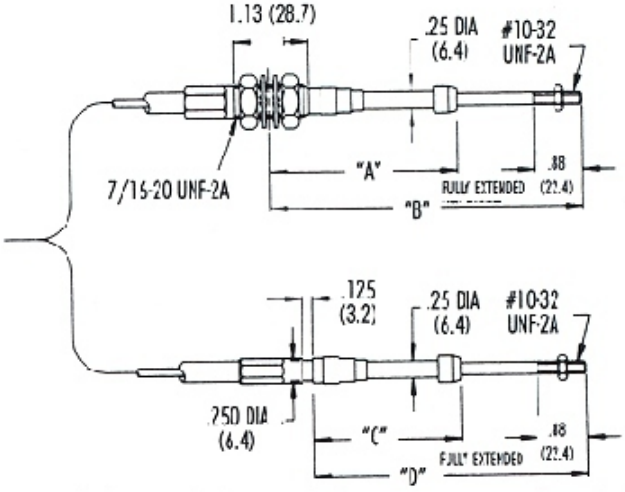

SPECIFICATIONS

Travel	Bulkhead End		Clamp End	
MM/(Inch)	DIM "A" MM/(Inch)	DIM "B" MM/(Inch)	DIM "C" MM/(Inch)	DIM "D" MM/(Inch)
25.4 (1)	76.2 (3)	125.5 (4.94)	58.7 (2.31)	108.0 (4.25)
50.8 (2)	101.6 (4)	176.3 (6.94)	84.1 (3.31)	158.8 (6.25)
76.2 (3)	127.0 (5)	227.1 (8.94)	109.5 (4.31)	209.6 (8.25)

Load Rating: Maximum 20lbs. Is recommended.

Building a Part Number

	0	0	0	3			9					

Overall Length in MM

Conduit Fitting Type:
0 = Plain
2 = Bulkhead
3 = Clamp
5 = Shoulder

Head Type:
00 None - Cable Only
90 Vernier - Black Button - Black Knob
92 Vernier - Black Button - Black Knob
94 Vernier - Red Button - Black Knob
73 Positive Lock - 3" Travel
75 Positive Lock - 5" Travel

Cable Travel: (Specified in inches)
1,2 or 3".

Cable type:
0 = Solid Core (3 Series only)
1 = Hi-Performance
3 = HEFT2 (High performance & High Temperature)

Notes:

Fitting and hardware material for a 100.33X9X.LENGTH cable.

Conduit fittings:
Disconnect Hub = Aluminium
Bulkhead = Aluminum
Clamp = Stainless Steel 303
Shoulder = Steel with Zinc plate

Hardware (Nuts/Washers): Steel with Zinc plate

Rods: Stainless Steel 303

To Order
Vernier and Positive Lock cable control heads may be ordered as acomplete assembly (head and cable attached) or separately. Order the desired control head using the two digit number 0,92,94,73 or 75 (Positive Lock head).
Order the cable using the five digit number from "Building a Part Number".
To order a complete assembly, combine the control head number with the desired cable number. Example: if you desire control head No. 94 and cable No. 03339, then combine to make the assembly part No.: X94-33092-length.

M. Knöpfli AG
Wiesackerstr. 128
8105 Regensdorf
Tel: ++41 44 840 62 21
info@m-knoepfli.com

Manufacturers of ORSCHELN and FELSTED products

No part of this document is to be copied or disclosed to a third party without the prior written consent of Orscheln Europe.

ORSCHELN EUROPE

Quick Disconnect HD 4 SERIES

- & Heavy Duty
- & 127mm (5") Bend Radii
- & Applications: engine RPM, or where coarse or fine adjustments are needed.
- & Temperature Range:
  -54 to +107°C Std.
  -54 to +149°C Heft2
- & HP=Low Backlash,
  High Efficiency,
  Best Flexibility.
- & Conduit Colour:
  Dark Maroon - HP Cable Std.
  Gloss Black - HEFT2

Building a Part Number

	0	0	0	4			9				

- Overall Length in MM
- Conduit Fitting Type:
  2 = Bulkhead
  3 = Clamp
- Head Type:
  00 None - Cable Only
  90 Vernier - Black Button - Black Knob
  92 Vernier - Black Button - Black Knob
  94 Vernier - Red Button - Black Knob
  73 Positive Lock - 3" Travel
  75 Positive Lock - 5" Travel
- Cable Travel: (Specified in inches)
  1,2,3".
- Cable type:
  1 = Hi-Performance
  3 = HEFT2 (High performance & High Temperature)

HEAD OPTIONS ARE AS 3SRS LIGHT DUTY

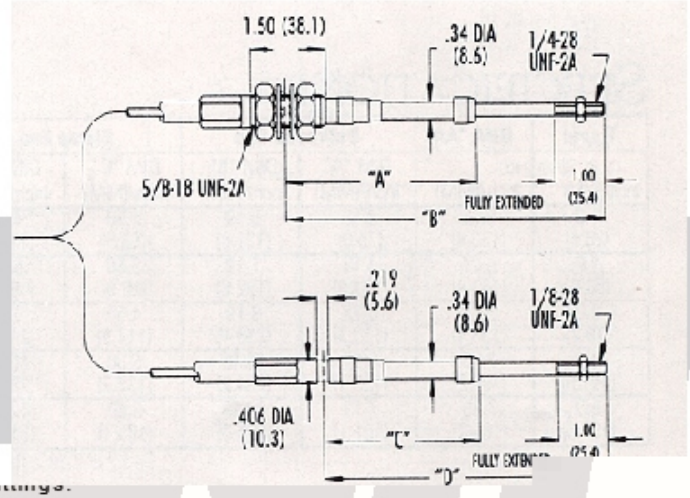

Notes:

Fitting and hardware material for a 100.04xx9.LENGTH cable.

- Conduit fittings:
  Disconnect Hub = Aluminium
  Bulkhead = Aluminum
  Clamp = Aluminum
- Hardware (Nuts/Washers): Steel with Zinc plate
- Rods: Stainless Steel 303
- To Order
  Vernier and Positive Lock cable control heads may be ordered as a complete assembly (head and cable attached) or separately. Order the desired control head using the two digit number 0,92,94,73 or 75 (Positive Lock head).
  Order the cable using the five digit number from "Building a Part Number".
  To order a complete assembly, combine the control head number with the cable number. Example: if you desire control head No. 94 and lo. 04339, then combine to make the assembly .: X94-04339-length.

SPECIFICATIONS

Travel	Bulkhead End		Clamp End	
MM/(Inch)	DIM "A" MM/(Inch)	DIM "B" MM/(Inch)	DIM "C" MM/(Inch)	DI MM
25.4 (1)	79.5 (3.13)	131.8 (5.19)	63.5 (2.50)	115.
50.8 (2)	104.9 (4.13)	182.6 (7.19)	88.9 (3.50)	166.
76.2 (3)	130.3 (5.13)	233.4 (9.19)	114.3(4.50)	217.

Load Rating: Maximum 20lbs. Is recommended

M. Knöpfli AG
Wiesackerstr. 128
8105 Regensdorf
Tel: ++41 44 840 62 21
info@m-knoepfli.com

Manufacturers

ORSCHELN EUROPE

6 HP Tension SERIES

- & 3,4 and 6 Series Available
- & Improved Boot Seals.
- & Tear Resistant Silicone Boots.
- & 177.8mm (7") Bend Radii
- & HP 1x19 Core.
- & 5/16-24 UNF Rod Threads (M8 available).
- & Temperature Range:
  -54 to +107°C Std.
  -54 to +149°C Heft2
- & Low Backlash
- & Polymer Liner.
- & Conduit Colour:
  Dark Maroon - HP Cable Std.
  Gloss Black - HEFT2

Building a Part Number

		0	0	6	5									

- Cable type:
  1 = Hi-Performance
  3 = HEFT2 (High performance & High Temperature)
- Cable Travel:
  1,2,3,4,5
- Conduit Fitting Type:
  2 = Bulkhead
  3 = Clamp
- Overall Length in MM

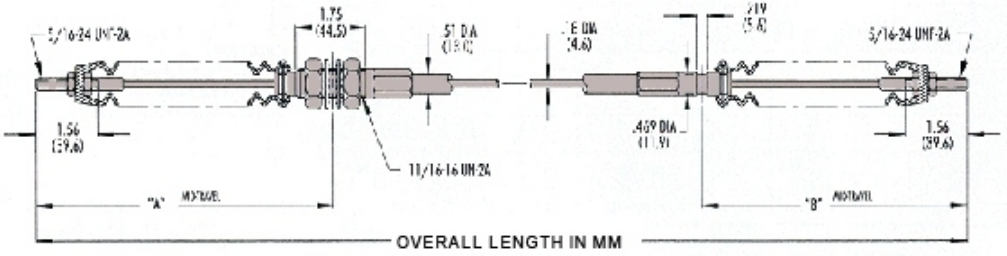

SPECIFICATIONS

Travel	Bulkhead End	Clamp End	Operating Loads	
MM/(Inch)	DIM "A" MM/(Inch)	DIM "B" MM/(Inch)	Push Kg/(N)	Pull Kg/(N)
25.4 (1)	130.3 (5.23)	112.8 (4.44)	0	181.4 (1779)
50.8 (2)	168.4 (6.63)	150.9 (5.94)	0	181.4 (1779)
76.2 (3)	206.5 (8.13)	189.0 (7.44)	0	181.4 (1779)
101.6 (4)	244.6 (9.63)	227.1(8.94)	0	181.4 (1779)
127.0 (5)	282.7 (11.13)	265.2 (10.44)	0	181.4 (1779)

Notes:

Fitting and hardware material for a 100.65XXX.LENGTH cable.

- Conduit fittings:
  Bulkhead = Aluminium
  Clamp = Aluminium
- Hardware (Nuts/Washers): Steel with Zinc plate
- Rods: Stainless Steel 303

M. Knöpfli AG
Wiesackerstr. 128
8105 Regensdorf
Tel: ++41 44 840 62 21
info@m-knoepfli.com

Manufacturers of ORSCHELN and FELSTED products

No part of this document is to be copied or disclosed to a third party without the prior written consent of Orscheln Europe.

Building a Part Number

0	0	0	3	5	0	0	0					

Overall Length in MM

- & Power Take Off Operation
- & 2.3 (.093") Ø Stainless Steel Core
- & Full 127 (5") Travel
- & 152.4mm (6") Bend Radii
- & Temperature Range: -54 to +107°C Std.
- & Polymer Liner.
- & Conduit Colour: Dark Maroon - HP Cable Std.

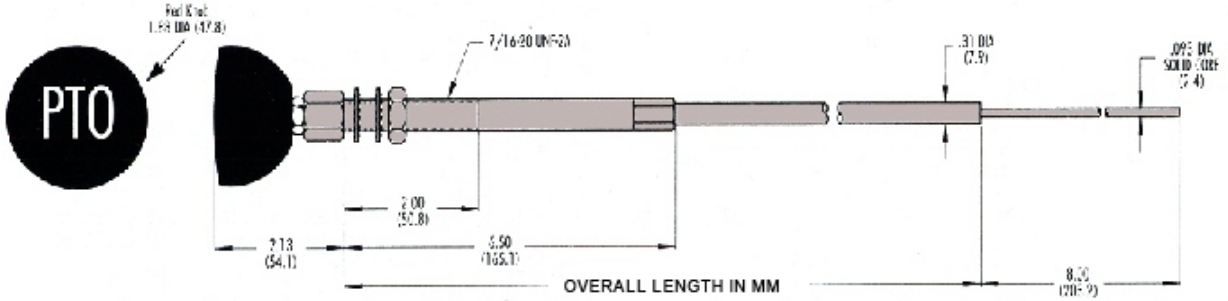

Notes:

Fitting and hardware material for a 000.35000.LENGTH cable.

- Conduit fittings: Universal = Aluminium
- Hardware (Nuts/Washers): Steel with Zinc plate

M. Knöpfli AG
Wiesackerstr. 128
8105 Regensdorf
Tel: ++41 44 840 62 21
info@m-knoepfli.com

Manufacturers of ORSCHELN® and FELSTED® products

No part of this document is to be copied or disclosed to a third party without the prior written consent of Orscheln Europe.

ORSCHELN EUROPE

4 RVO Cables SERIES

- & Remote Valve Control Operation (Felsted Levers Only)
- & HP Cable Construction
- & 127mm (5") Bend Radii
- & 1/4-28 UNF Rod Threads
- & Temperature Range:
  -54 to +107°C Std.
  -54 to +149°C Heft2
- & Low Backlash
- & Polymer Liner.
- & Conduit Colour:
  Dark Maroon - HP Cable Std.
  Gloss Black - HEFT2

Building a Part Number

	0	0	4	5	6						

Overall Length in MM

Conduit Fitting Type:
00 = Universal
22 = Bulkhead
23 = Clamp

Cable type:
1 = Hi-Performance
3 = HEFT2 (High performance & High Temperature)

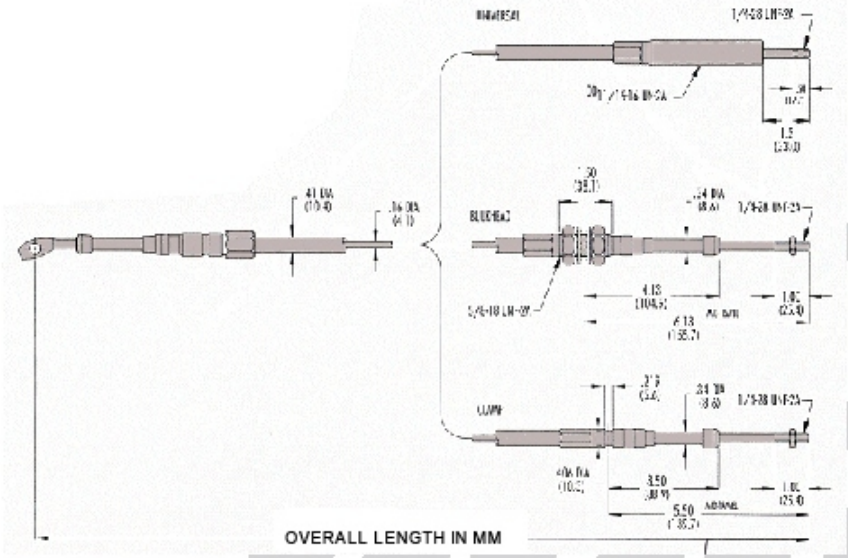

Connects to Felsted Brand Remote Valve controls:
55700
55709
55786-1

Notes:

Fitting and hardware material for a 100.456XX.LENGTH cable.

- Conduit fittings:
  Universal = Steel with Zinc plate
  Bulkhead = Aluminium
  Clamp = Aluminium
- Hardware (Nuts/Washers): Steel with Zinc plate
- Rods: Stainless Steel 303

M. Knöpfli AG
Wiesackerstr. 128
8105 Regensdorf
Tel: ++41 44 840 62 21
info@m-knoepfli.com

Manufacturers of ORSCHELN and FELSTED products

No part of this document is to be copied or disclosed to a third party without the prior written consent of Orscheln Europe.

ORSCHELN EUROPE

4 RVC Cables SERIES

- & Remote Valve Control Operation
- & Fits Competitor RVC controls
- & HP Cable Construction
- & 127mm (5") Bend Radii
- & 1/4-28 UNF Rod Threads

- & Temperature Range:
  -54 to +107°C Std.
  -54 to +149°C Heft2
- & Low Backlash
- & Polymer Liner.
- & Conduit Colour:
  Dark Maroon - HP Cable Std.
  Gloss Black - HEFT2

Building a Part Number

		0	0	4	5	7						

Overall Length in MM

Conduit Fitting Type:
93 = Universal
95 = Clamp
94 = Bulkhead

Cable type:
1 = Hi-Performance
3 = HEFT2 (High performance & High Temperature)

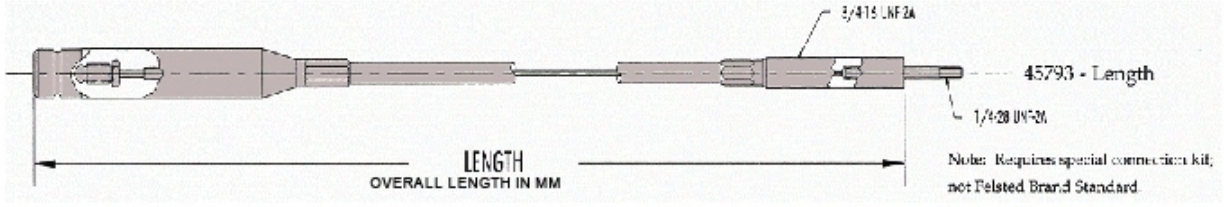

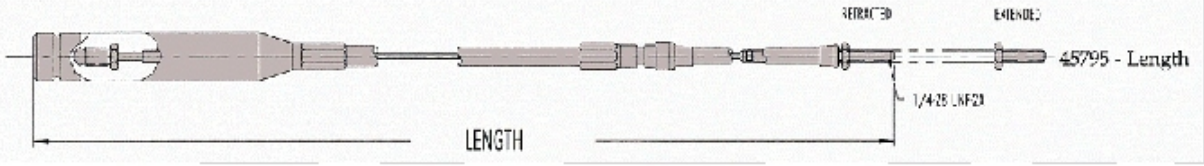

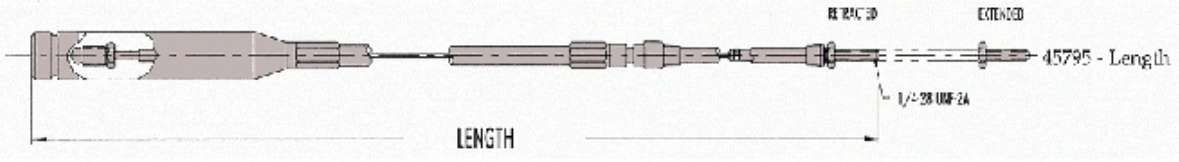

Notes:

Fitting and hardware material for a 100.457XX.LENGTH cable.

Conduit fittings:
Universal = Steel with Zinc plate
Bulkhead = Aluminium
Clamp = Aluminium

Hardware (Nuts/Washers): Steel with Zinc plate

Rods: Stainless Steel 303

M. Knöpfli AG
Wiesackerstr. 128
8105 Regensdorf
Tel: ++41 44 840 62 21
info@m-knoepfli.com

Manufacturers of ORSCHELN and FELSTED products

No part of this document is to be copied or disclosed to a third party without the prior written consent of Orscheln Europe.

ORSCHELN EUROPE

4 series

Special Valve Control Cables

- & HD Lever Applications
- & Remote Valve Dump Body Control Use
- & HP Cable Construction
- & 127mm (5") Bend Radii
- & 1/4-28 UNF Rod Threads

- & Temperature Range:
  -54 to +107°C Std.
  -54 to +149°C Heft2
- & Low Backlash
- & Polymer Liner.
- & Conduit Colour:
  Dark Maroon - HP Cable Std.
  Gloss Black - HEFT2

Building a Part Number

	0	0	4	5	6						

Overall Length in MM

Conduit Fitting Type:
00 = Universal
22 = Bulkhead
23 = Clamp

Cable type:
1 = Hi-Performance
3 = HEFT2 (High performance & High Temperature)

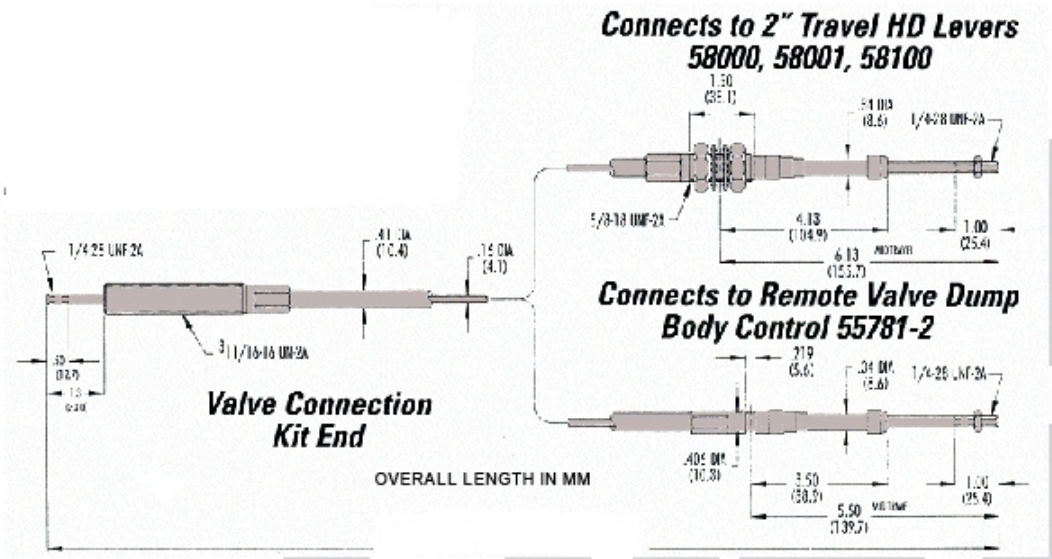

Notes:

Fitting and hardware material for a 100.456XX.LENGTH cable.

- Conduit fittings:
  Universal = Steel with Zinc plate
  Bulkhead = Aluminium
  Clamp = Aluminium
- Hardware (Nuts/Washers): Steel with Zinc plate
- Rods: Stainless Steel 303

M. Knöpfli AG
Wiesackerstr. 128
8105 Regensdorf
Tel: ++41 44 840 62 21
info@m-knoepfli.com

Manufacturers of ORSCHELN and FELSTED products

No part of this document is to be copied or disclosed to a third party without the prior written consent of Orscheln Europe.

ORSCHELN EUROPE

Hardware

Clevises

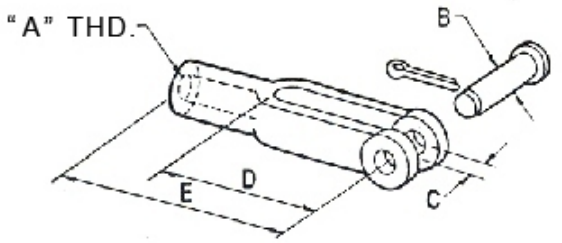

Part No.:	A	B MM/(Inch)	C MM/(Inch)	D MM/(Inch)	E MM/(Inch)
3 Series					
39003-1	10-32 UNF-2B	4.8 (3/16)	5.6 (7/32)	25.4 (1)	39.7 (1-9/16)
49003-2	10-32 UNF-2B	6.4 (1/4)	7.1 (9/32)	31.8 (1-1/4)	50.8 (2)
69003-2	10-32 UNF-2B	7.9 (5/16)	8.7 (11/32)	36.5 (1-7/16)	57.2 (2-1/4)
4 Series					
49003-1	1/4-28 UNF-2B	6.4 (1/4)	7.1 (9/32)	31.8 (1-1/4)	50.8 (2)
49044-1	1/4-28 UNF-2B	12.7 (1/2)	14.3 (9/16)	47.6 (1-7/8)	76.2 (3)
69003-3	1/4-28 UNF-2B	7.9 (5/16)	8.7 (11/32)	36.5 (1-7/16)	57.2 (2-1/4)
6 Series					
49003-3	5/16-24 UNF-2B	6.4 (1/4)	7.1 (9/32)	31.8 (1-1/4)	50.8. (2)
49044-2	5/16-24 UNF-2B	12.7 (1/2)	14.3 (9/16)	47.6 (1-7/8)	76.2 (3)
69003-1	5/16-24 UNF-2B	7.9 (5/16)	8.7 (11/32)	36.5 (1-7/16)	57.2 (2-1/4)
69034	5/16-24 UNF-2B	11.1 (7/16)	12.7 (1/2)	47.6 (1-7/8)	73.1 (2-7/8)
89003-2	5/16-24 UNF-2B	9.5 (3/8)	11.1 (7/16)	41.3 (1-5/8)	63.5 (2-1/2)
8 Series					
89003-1	3/8-24 UNF-2B	9.5 (3/8)	11.1 (7/16)	41.3 (1-5/8)	63.5 (2-1/2)
Specials					
49044-3	3/8-24 UNF-2	12.7 (1/2)	14.3 (9/16)	47.6 (1-7/8)	76.2 (3)
49044-4	1/2-20 UNF-2	12.7 (1/2)	14.3 (9/16)	47.6 (1-7/8)	76.2 (3)
69034-1	3/8-24 UNF-2	11.1 (7/16)	12.7 (1/2)	47.6 (1-7/8)	73.1 (2-7/8)

Ball Joints

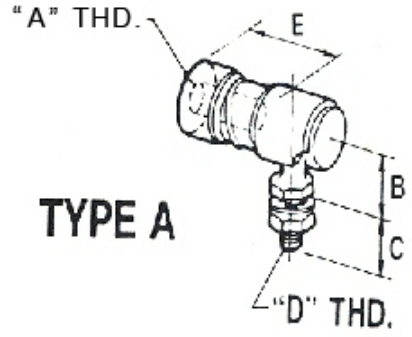

Part No.:	Type	A MM/(Inch)	B MM/(Inch)	C MM/(Inch)	D MM/(Inch)	E MM/(Inch)
3 Series						
39006	A	10-32 UNF-2B	11.9 (15/32)	14.3 (9/16)	1/4-28 UNF-2A	24.6 (31/32)
4 Series						
49006	A	1/4-28 UNF-2B	11.9 (15/32)	14.3 (9/16)	1/4-28 UNF-2A	24.6 (31/32)
49007	A	1/4-28 UNF-2B	11.9 (15/32)	22.2 (7/8)	5/16-24 UNF-2A	24.6 (31/32)
6 Series						
69007	A	5/19-24 UNF-2B	13.5 (17/32)	17.5 (11/16)	5/16-24 UNF-2A	28.5 (1-1/8)

Conduit Clip:

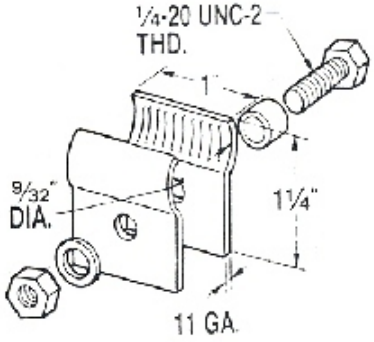

Type B
Part No.: 36064-1

Notes:

- The 39003-1 is made from a polymer and differs to the illustration shown.
- We offer a huge variety of other hardware not shown here, so if you're requirement is not listed please call!

M. Knöpfli AG
Wiesackerstr. 128
8105 Regensdorf
Tel: ++41 44 840 62 21
info@m-knoepfli.com

Manufacturers of ORSCHELN and FELSTED products

No part of this document is to be copied or disclosed to a third party without the prior written consent of Orscheln Europe.

ORSCHELN EUROPE

Hardware

Pivots

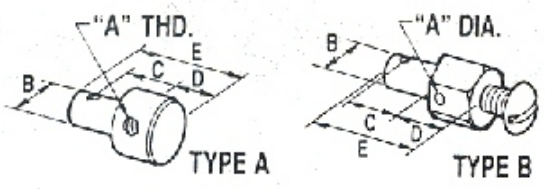

Terminal Eyes

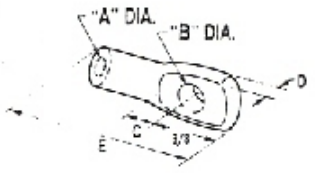

Clip Bracket

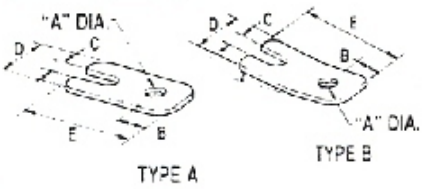

Part No.:	Type	A MM/(Inch)	B MM/(Inch)	C MM/(Inch)	D MM/(Inch)	E MM/(Inch)
3 Series						
39011-1	B	2.8 (7/64)	6.4 (1/4)	4 (5/32)	7.9 (5/16)	14.3 (9/16)
39011-2	B	2.8 (7/64)	6.4 (1/4)	7.5 (19/64)	7.9 (5/16)	17.5 (11/16)
36050-1	B	2.8 (7/64)	7.9 (5/16)	4.0 (5/32)	7.9 (5/16)	14.7 9/16
39050-2	B	2.8 (7/64)	7.9 (5/16)	7.5 (19/64)	7.9 (5/16)	17.5 (11/16)
39042	A	10-32 UNF-2B	6.4 (1/4)	5.2 (13/64)	8.3 (21/64)	15.9 (5/8)
39045	A	10-32 UNF-2B	7.9 (5/16)	9.5 (3/8)	9.5 (3/8)	23.8 (15/16)
4 Series						
49008	A	1/4-28 UNF-2B	6.4 (1/4)	10.3 (13/32)	12.7 (1/2)	27.0 (1-1/16)
49008-1	A	1/4-28 UNF-2B	6.4 (1/4)	7.9 (5/16)	12.7 (1/2)	24.6 (31/32)
49011	A	1/4-28 UNF-2B	6.4 (1/4)	5.2 (13/64)	11.1 (7/16)	19.1 (3/4)
50061-1	A	1/4-28 UNF-2B	7.9 (5/16)	4.8 (3/16)	14.3 (9/16)	21.4 (27/32)
6 Series						
50061-2	A	5/16-24 UNF-2B	7.9 (5/16)	4.8 (3/16)	14.3 (9/16)	21.4 (27/32)

Part No.:	A MM/(Inch)	B MM/(Inch)	C MM/(Inch)	D MM/(Inch)	E MM/(Inch)
3 Series					
49004-4	10-32 UNF-2B	3.2 (1/8)	15.9 (5/8)	9.5 (3/8)	47.6 (1-7/8)
4 Series					
49004-1	1/4-28 UNF-2B	7.9 (5/16)	15.9 (5/8)	9.5 (3/8)	47.6 (1-7/8)
49004-2	1/4-28 UNF-2B	12.7 (1/2)	15.9 (5/8)	9.5 (3/8)	47.6 (1-7/8)
49004-3	1/4-28 UNF-2B	6.4 (1/4)	15.9 (5/8)	9.5 (3/8)	47.6 (1-7/8)
6 Series					
69004-1	5/16-24 UNF-2B	9.5 (3/8)	15.9 (5/8)	9.5 (3/8)	47.6 (1-7/8)
69004-2	5/16-24 UNF-2B	7.9 (5/16)	15.9 (5/8)	9.5 (3/8)	47.6 (1-7/8)
69004-3	5/16-24 UNF-2B	12.7 (1/2)	15.9 (5/8)	9.5 (3/8)	47.6 (1-7/8)
69004-4	5/16-24 UNF-2B	6.4 (1/4)	15.9 (5/8)	9.5 (3/8)	47.6 (1-7/8)

Part No.:	Type	A MM/(Inch)	B MM/(Inch)	C MM/(Inch)	D MM/(Inch)	E MM/(Inch)
3 Series						
30121	B	7.5 (9/32)	9.5 (3/8)	6.4 (1/4)	15.9 (5/8)	30 (1-7/32)
30399	B	7.5 (9/32)	9.5 (3/8)	6.4 (1/4)	15.9 (5/8)	30 (1-7/32)
39004-1 (Stainless)	A	7.5 (9/32)	9.5 (3/8)	6.4 (1/4)	15.9 (5/8)	33.3 (1-5/16)
39004-2 (Plated steel)	A	7.5 (9/32)	9.5 (3/8)	6.4 (1/4)	15.9 (5/8)	33.3 (1-5/16)
39046	A	7.5 (9/32)	9.5 (3/8)	6.4 (1/4)	15.9 (5/8)	58.7 (2-5/16)

Field Clamp

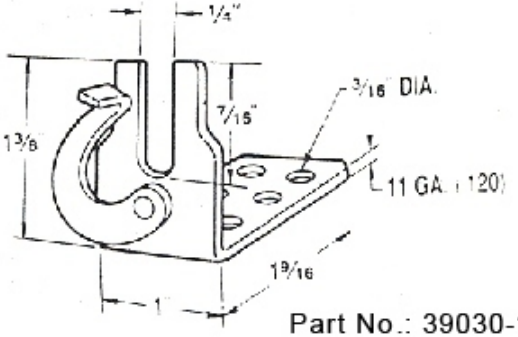

Part No.: 39030-1

M. Knöpfli AG
Wiesackerstr. 128
8105 Regensdorf
Tel: ++41 44 840 62 21
info@m-knoepfli.com

Manufacturers of ORSCHELN and FELSTED products

No part of this document is to be copied or disclosed to a third party without the prior written consent of Orscheln Europe.

ORSCHELN EUROPE

Hardware

Stop Collars

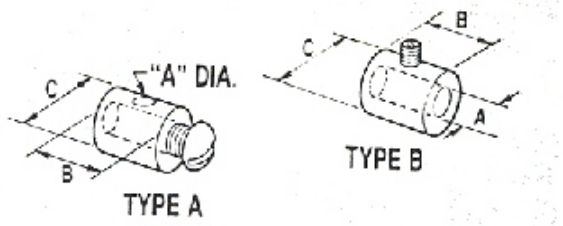

Part No.:	Type	A MM/(Inch)	B MM/(Inch)	C MM/(Inch)
3 Series				
30103	A	2.8 (7/64)	7.9 (5/16)	7.9 (5/16)
4 Series				
40081	A	4.8 (3/16)	7.9 (5/16)	7.9 (5/16)
49043	B	4.8 (3/16)	6.4 (1/4)	11.1 (7/16)

Clamp

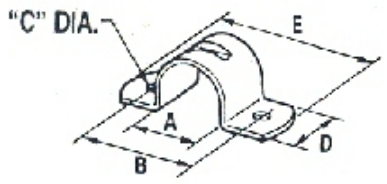

Part No.:	A MM/(Inch)	B MM/(Inch)	C MM/(Inch)	D MM/(Inch)	E MM/(Inch)
3 Series					
39001	9.5 (3/8)	25.4 (1)	5.2 (13/64)	12.7 (1/2)	38.1 (1-1/2)
4 Series					
49001	12.7 (1/2)	25.4 (1)	5.6 (7/32)	12.7 (1/2)	38.1 (1-1/2)
6 Series					
69001	14.3 (9/16)	31.8 (1-1/4)	7.1 (9/32)	15.9 (5/8)	41.3 (1-5/8)

Shim

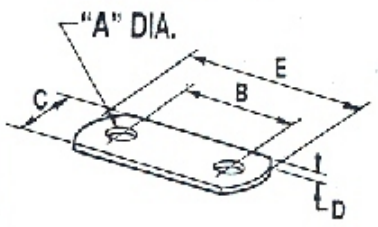

Part No.:	A MM/(Inch)	B MM/(Inch)	C MM/(Inch)	D MM/(Inch)	E MM/(Inch)
3 & 4 Series					
39002	5.2 (13/64)	25.4 (1)	12.7 (1/2)	2.4 (3/32)	38.1 (1-1/2)
6 Series					
69002	7.5 (9/32)	31.8 (1-1/4)	15.9 (5/8)	2.0 (5/64)	44.5 (1-3/4)

Shifter Cable Connection Kits

Kit No.:	A THD.	B DIA.	C MM/(Inch)	D THD.	E
50030	1/4-28 UNF-2B	7.9 (5/16)	12.7 (1/2)	10-32 UNF-2A	3.2 (1/8)
50035	5/16-24 UNF-2B	7.9 (5/16)	31.8 (1-1/4)	1/4-20 UNC-2A	3.2 (1/8)
59033	10-32 UNF-2B	7.9 (5/16)	25.4 (1)	10-32 UNF-2A	3.2 (1/8)

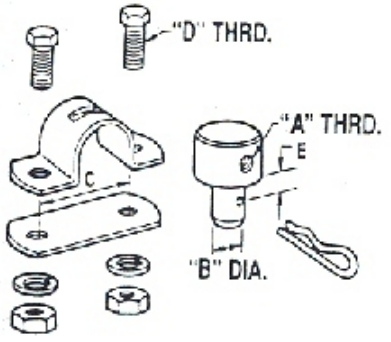

M. Knöpfli AG
Wiesackerstr. 128
8105 Regensdorf
Tel: ++41 44 840 62 21
info@m-knoepfli.com

Manufacturers of ORSCHELN® and FELSTED® products

No part of this document is to be copied or disclosed to a third party without the prior written consent of Orscheln Europe.

Slip Link Kit

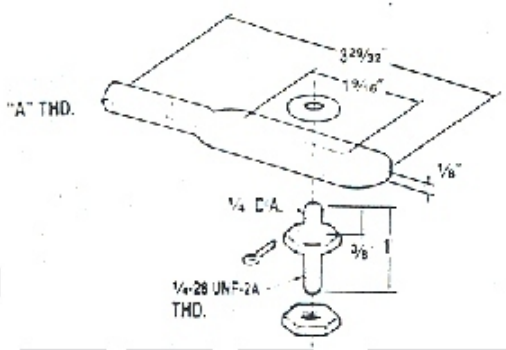

Kit Number		"A" THD.
Polymer	59049-1	10-32 UNF-2A
	59049-2	1/4-28 UNF-2A
Metal	M00.59049-1	10-32 UNF-2A
	M00.59049-2	1/4-28 UNF-2A

- Solid or HP Core
- Conduit Outside Diameter of 7.87mm (.31")

Field Hub Kits for Standard Felsted 3 Series Cables	
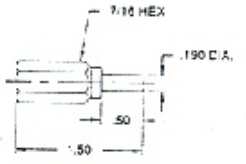	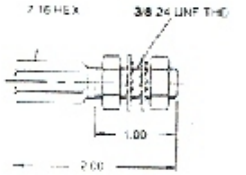
Kit No.: 39067-1 SHOULDER HUB	39067-2 3/8-14 THD HUB
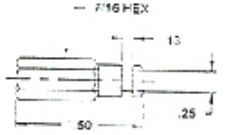	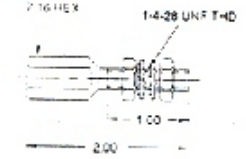
Kit No.: 39067-3 CLAMP HUB	39067-4 1/4-28 THD HUB

M. Knöpfli AG
Wiesackerstr. 128
8105 Regensdorf
Tel: ++41 44 840 62 21
info@m-knoepfli.com

No part of this document is to be copied or disclosed to a third party without the prior written consent of Orscheln Europe.

ORSCHELN EUROPE

Specifications

Felsted Pull HP Cables Typical Efficiencies

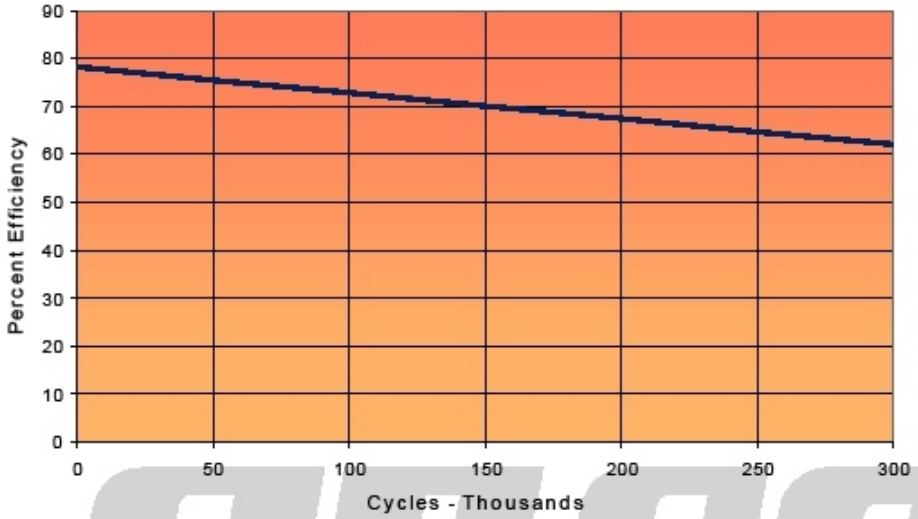

Felsted Pull HP Cables Typical Backlash vs. Degrees Bend

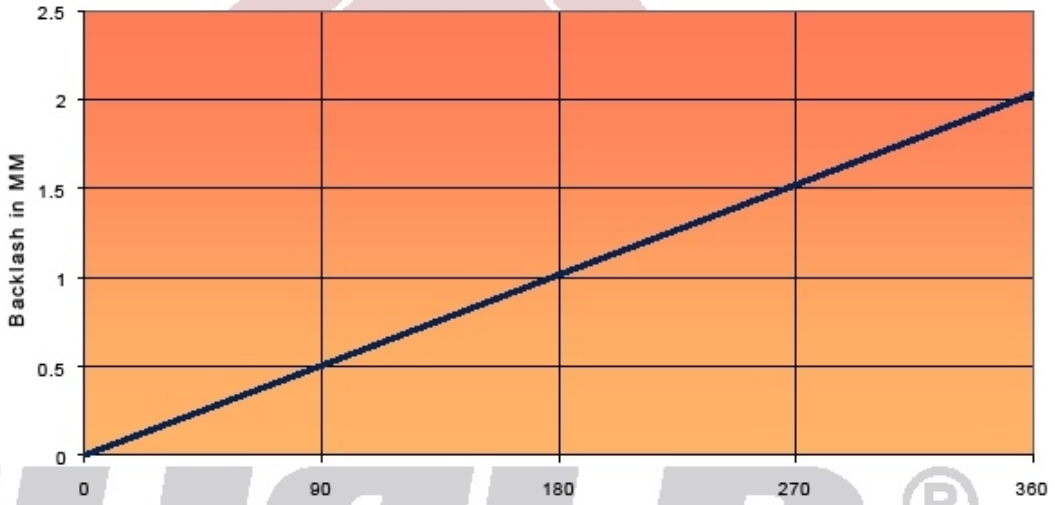

Severe Routing: 3" Travel,Assembly, 3.657M Overall Length, 510° Total Bend

Efficiency:

The efficiency factor of a cable system helps determine what series of cable to use in a given situation. Affected by the total degrees of bend in the cable, efficiency shows how much input force is needed to produce a desired output load. Use the following formula and tables to calculate.

INPUT FORCE=OUTPUT LOAD x EFFICIENCY FACTOR

$$\text{OUTPUT LOAD=OL=}\frac{\text{INPUT FORCE IF}}{\text{EFFICIENCY FACTOREF}}$$

For example, the application requires an output load of 18Kg and the cable follows a path totalling 315° bend. Select the correct efficiency factor from the Efficiency Graph (Right) (315° bend = 1.3 Efficiency Factor).

FORMULA:OUTPUT x EFFICIENCY FACTOR = INPUT REQUIRED
SO: 18Kg x 1.3 = 23.4Kg Input Required.

In the above example, the cable configuration with 315° total bend, 23.4Kg input force is needed to produce the required 18Kg output. Based on this data, a HP 3 series cable would be recommended.

Efficiency Graph

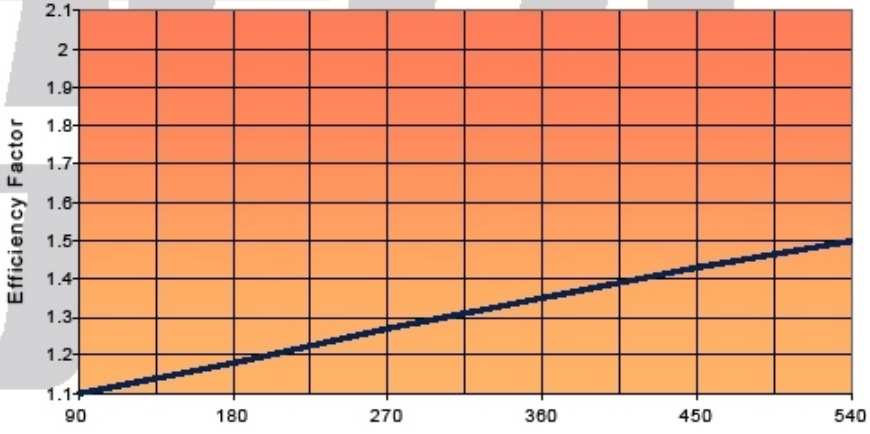

Total Degrees Bend In Cable Path	90	180	270	360	450
Efficiency Factors	1.10	1.18	1.27	1.35	1.43

M. Knöpfli AG
Wiesackerstr. 128
8105 Regensdorf
Tel: ++41 44 840 62 21
info@m-knoepfli.com

Manufacturers of ORSCHELN and FELSTED products

No part of this document is to be copied or disclosed to a third party without the prior written consent of Orscheln Europe.

Routing/Measuring

Measure the cabke along the path it will take from the points where the cable hubs will be anchored. Follow the actual cable path as closely as possible, allowing for the largest practical bend radii.

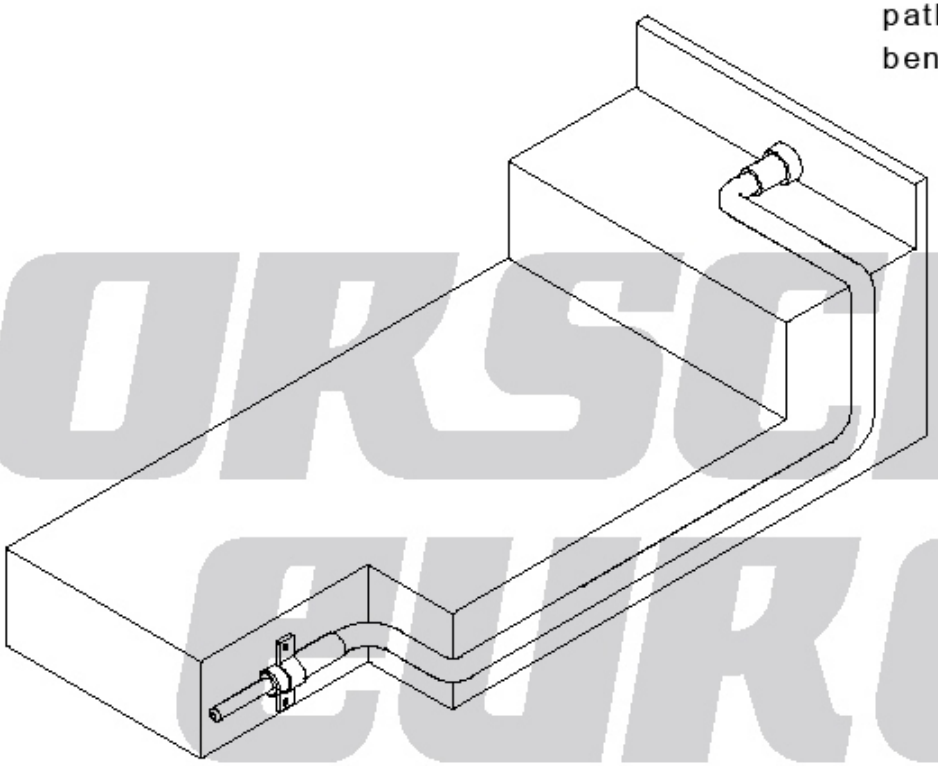

Optimum Life Bend Radii	
Series	Operating Life Minimum
3*	76.2MM
4	127.0MM
6	177.8MM
8	254.0MM

*HP Core: Solid Core has 152.4mm Bend Radii

M. Knöpfli AG
Wiesackerstr. 128
8105 Regensdorf
Tel: ++41 44 840 62 21
info@m-knoepfli.com

No part of this document is to be copied or disclosed to a third party without the prior written consent of Orscheln Europe.

Installation Notes: Control & Work End

For the highest efficiency and long life in lever actuating operations, install the cable so that the highest loads are operated with tension (pulling), rather than compression (pushing).

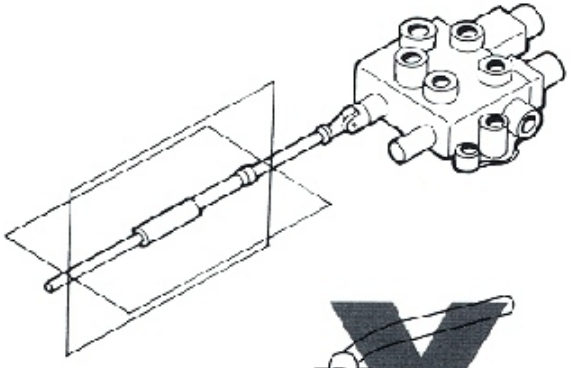

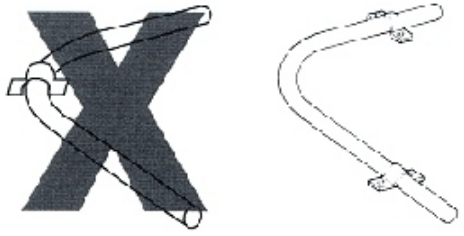

It is important to securely anchor the cable hubs. Looseness of the mounting bracket will be perceived as lost motion ("sponginess") and will inhibit the detent feel.

Also, clamping in the bend area may reduce bend radii under operating loads. Clamping at tangents to the bend is preferred.

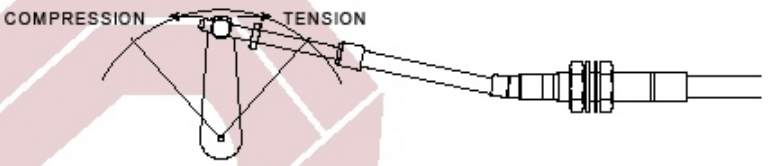

For the highest efficiency and long life in lever actuating operations, install the cable so that the highest loads are operated with tension (pulling), rather than compression (pushing).

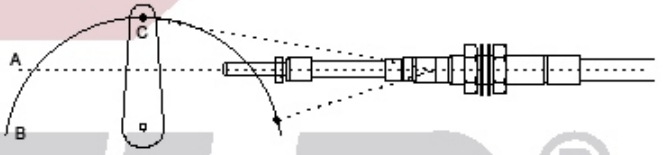

Where the cable is connected to a lever, the cable wil be mounted so that it lies on a plane (A) midway on the arc (B) described by the movement of the connection point on the lever (C).

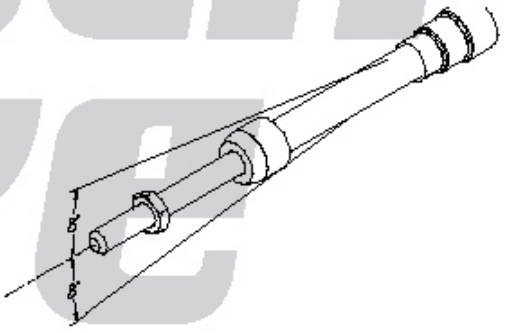

All Felsted cables with rod and sleeve type fittings have a built-in swivel to handle deflections up to 8°.

M. Knöpfli AG
Wiesackerstr. 128
8105 Regensdorf
Tel: ++41 44 840 62 21
info@m-knoepfli.com

No part of this document is to be copied or disclosed to a third party without the prior written consent of Orscheln Europe.